MURPHY - B815

Resistors

R1	8·2kΩ	D2
R2	10kΩ	D2
R3	5·6kΩ	B1
R4	10kΩ	D2
R5	330Ω	B1
R6	330Ω	B1
R7	220kΩ	B1
R8	1kΩ	B1
R9	5·6kΩ	B1
R10	5·6kΩ	B1
R11	56kΩ	B1
R12	1kΩ	B1
R13	680Ω	A1
R14	18kΩ	A1
R16	680Ω	A1
R17	10kΩ	A1
R18	22kΩ	A1
R19	2·2kΩ	A1
R20	33kΩ	A1
R22	10Ω	A1
R23	390Ω	A1
R24	2·2kΩ	A1
R25	VA1040	A1
R26	200Ω	A1
R27	1·5kΩ	A1
R28	2·2Ω	A1
R29	2·2Ω	A1
VR1	5kΩ	B1
VR2	10kΩ	A1

Capacitors

C1	25pF	D2
C2	135pF	D2
C3	25pF	D2
C4	39pF	D2
C6	110pF	D2
C7	30pF	C1
C8	15pF	C1
C9	392pF	C1
C10	392pF	C1
C11	15pF	C1
C12	30pF	C1
C13	25pF	D2
C14	430pF	D2
C15	340pF	D2
C16	25pF	D2
C17	0·022μF	D2
C18	0·01μF	B1
C19	0·022μF	B1
C20	0·01μF	D2
C21	200pF	B1
C22	0·01μF	B1
C23	0·022μF	B1
C24	200pF	B1
C25	0·01μF	B1
C26	200pF	B1
C27	200pF	B1
C28	0·01μF	B1
C29	200pF	A1
C30	0·022μF	B1
C31	0·01μF	A1
C32	100μF	A1
C33	4,700pF	A1
C34	12·5μF	A1
C35	100μF	A1
C36	12·5μF	A1
C37	0·1μF	A1
C38	300μF	A1
C40	300μF	A1
C41	250μF	A1
C42	10pF	D2

Coils and Transformers*

L1		3·5	D2
L2		11·5	D2
L3		3·0	D2
L4		1·25	B1
L5		—	B1
L6		9·0	A1
L7		1·25	A1
L8		25·0	†
T1	a	8·0	B1
	b	8·0	
T2	a	8·0	B1
	b	8·0	
T3	a	9·5	A1
	b	1·75	

Miscellaneous

D1	OA90	A1
S1-S11	—	C1

* *Approximate d.c. resistance in ohms.*
† *Speaker.*

Transistor Table

Transistor		Emitter (V)	Base (V)	Collector (V)
TR1	AF117	7·3	7·0	—
TR2	AF117	14·0	13·5	—
TR3	AF117	13·5	12·3	—
TR4	AF117	13·5	13·1	—
TR5	AC127	9·6	9·45	17·8
TR6	OC81	18·0	17·8	8·75
TR7	AC127	8·7	8·6	18·0
TR8	OC81	8·6	8·4	—

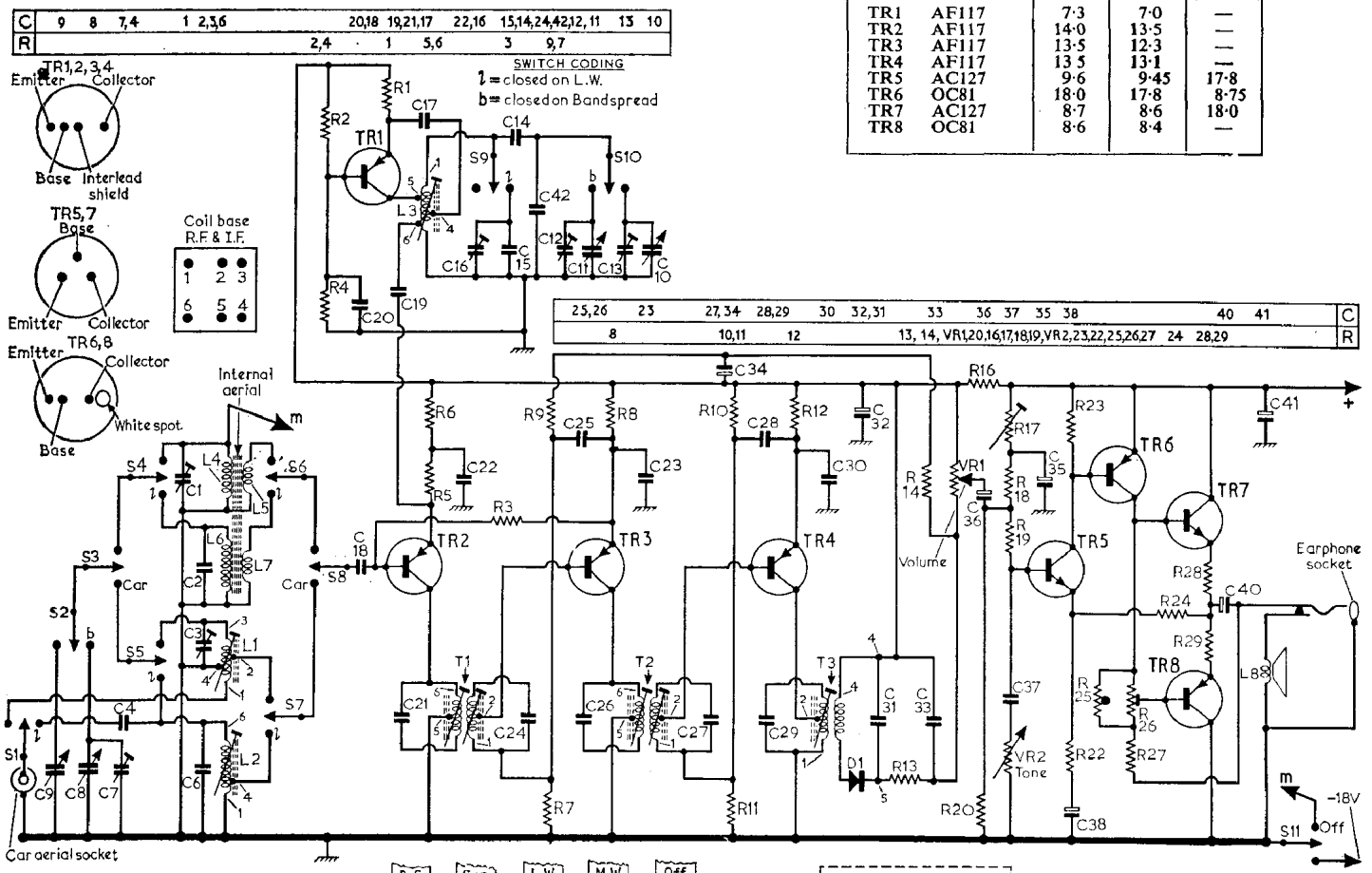

CIRCUIT ALIGNMENT

For alignment purposes, the chassis should be removed from the case.

Equipment required.—An a.m. signal generator covering the range 158kc/s to 1,605kc/s; a 0-1W output meter with an impedance to match 25Ω; a length of insulated wire formed into an r.f. coupling loop; a dummy car aerial, made up as shown in the diagram at right; a 0.1μF isolating capacitor and suitable trimming tools.

During alignment, the signal input level should be adjusted to maintain an output from the receiver of 50mW. When making adjustments to the r.f. circuits, the respective calibration marks should be observed on the tuning scale.

1.—Connect the signal generator via the 0.1μF capacitor between the junction S8/C18 and chassis. (These connecting points are shown on the chassis illustration as A and B, B being the chassis point.) Switch on the generator 15 minutes before alignment is commenced. Connect the output meter to the receiver via the earphone socket using the correct type of plug.

2.—Switch receiver to m.w. and tune to about 300m. Switch the car aerial button to "car" (depressed). Set the volume control to maximum and the tone control to maximum treble response.

3.—Feed in a 470kc/s signal, modulated 30 per cent at 400c/s, and adjust the cores of T3, T2 and T1 in that order, secondary winding first, for maximum audio output. These adjustments should be made once only and the cores should be left unsealed.

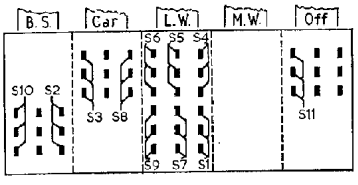

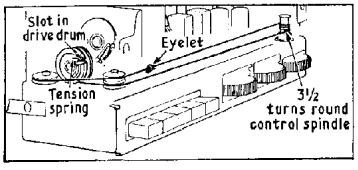

Top: Press-button switch connections
Above: Drive cord assembly

4.—Connect the signal generator to the r.f. loop and couple the loop to the receiver by placing it about three feet away from the receiver coaxial with the ferrite rod. Fully mesh the tuning gang and check the cursor datum setting by ensuring that half its width shows at the l.f. edge of the tuning scale. Switch the car aerial button to internal (released) position.

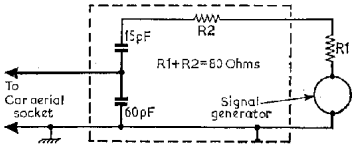

Schematic diagram of the dummy aerial required for alignment of the car aerial circuits.

5.—Tune receiver to 500m. Feed in a 600kc/s signal and adjust L3 for maximum output. Then adjust L4 for maximum output.

6.—Tune receiver to 208m. Feed in a 1,439kc/s signal and adjust C13 for maximum output.

7.—Tune receiver to 220m. Feed in a 1,364kc/s signal and adjust C1 for maximum output.

8.—Repeat operations 5, 6 and 7 and check calibration.

9.—Switch receiver to l.w. and tune to 1,400m. Feed in 214 kc/s signal and adjust C16 then L6 for maximum output. Repeat this operation and check calibration.

10.—Switch receiver to bandspread and tune to 200m. Feed in a 1,500kc/s signal and adjust C12 then C7 for maximum output. Recheck the calibration of 208m. m.w. and correct if necessary.

11.—Connect the signal generator via the dummy car aerial to the car aerial socket. Reset the car aerial switch to "car" (depressed).

12.—Switch receiver to m.w. and tune to 500m. Feed in a 600kc/s signal and adjust the core of L1 for maximum output.

13.—Tune receiver to 220m. Feed in a 1,364kc/s signal and adjust C3 for maximum output.

14.—Repeat operations 12 and 13 for maximum gain at both points.

15.—Switch receiver to l.w. and tune to 1,400m. Feed in 214kc/s signal and adjust L2 for maximum output.