MURPHY A28C

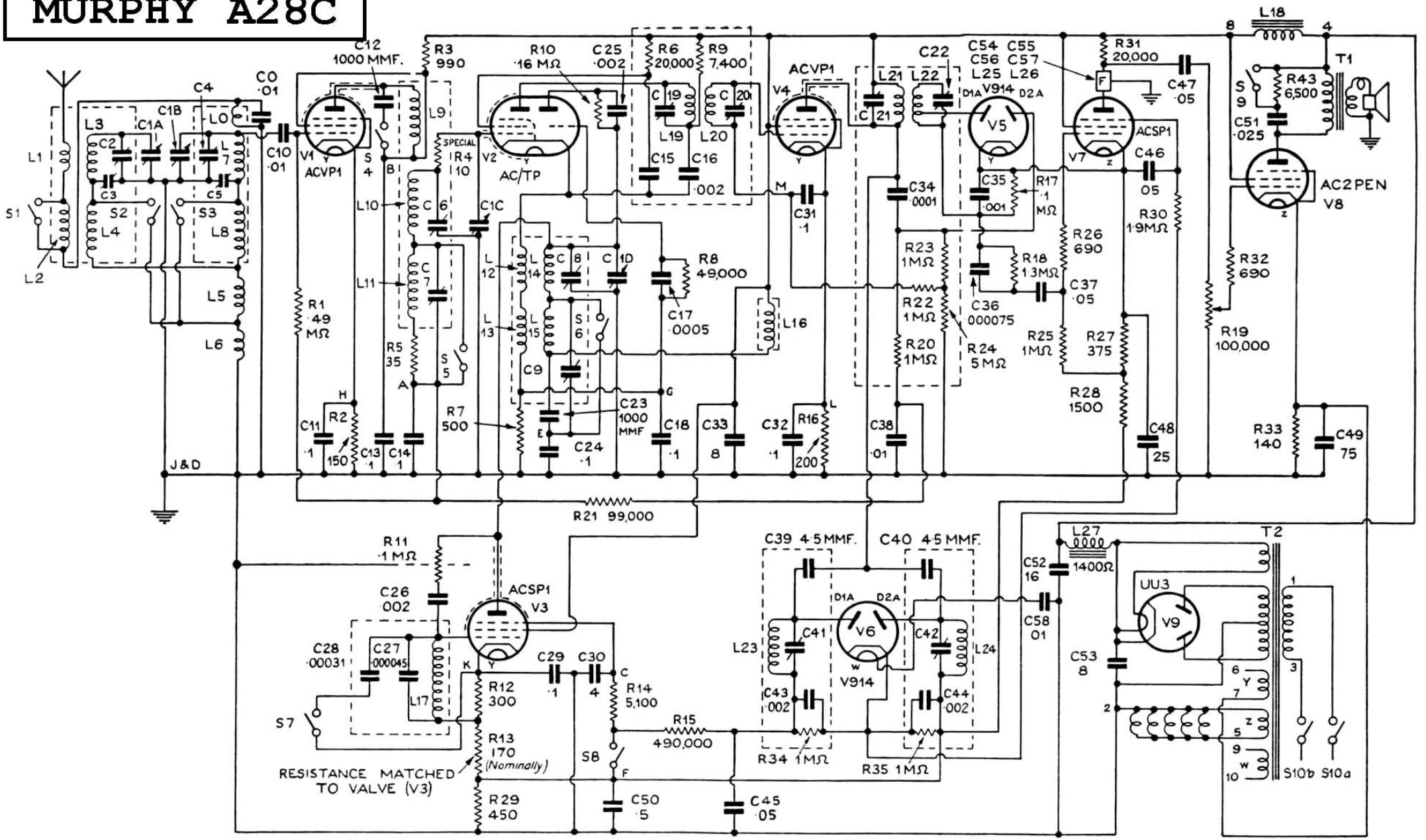

C12 1000 MMF.
R3 990
R10 ·16 MΩ
C25 ·002
R6 20,000
R9 7,400
ACVP1
V4
C22
C54 C55 C56 C57 L25 L26
R31 20,000
L18
T1
C47 ·05
R43 6,500
S9
C51 ·025
AC2PEN V8
C0 ·01
C4
C1B
C1A
L3
L0
L1
C2
C3
C5
L7
S1
S2
S3
L4
L8
L2
L5
L6
C10 ·01
V1 ACVP1
S4
L9
SPECIAL R4 10
V2 AC/TP
C19
C20
L19
L20
C15
C16 ·002
L21
L22
C21
D1A V914 D2A
V5
ACSP1
V7
C46 05
C34 ·0001
C35 ·001
R17 ·1 MΩ
R30 1·9MΩ
L10
C6
C1C
C31 ·1
R26 690
R23 1MΩ
R18 1·3MΩ
R32 690
L11
C7
L12
L14
C8
C1D
R8 49,000
C37 ·05
R22 1MΩ
C36 000075
R1 ·49 MΩ
L13
L15
S6
C17 ·0005
L16
R25 1MΩ
R27 375
R19 100,000
R5 35
S5
C9
R20 1MΩ
R24 5MΩ
R28 1500
C11 ·1
R2 150
C13 ·1
C14 ·1
R7 500
C23 1000 MMF
C24 ·1
C18 ·1
C33 8
C32 ·1
R16 200
C38 ·01
C48 25
R33 140
C49 75
J&D
R21 99,000
R11 ·1 MΩ
C26 ·002
ACSP1 V3
C28 ·00031
C27 ·000045
L17
S7
C29 ·1
C30 4
R12 300
R14 5,100
R13 170 (Nominally)
RESISTANCE MATCHED TO VALVE (V3)
R29 450
S8
C50 ·5
R15 490,000
C45 ·05
C39 4·5 MMF.
C40 4·5 MMF.
D1A D2A
V6
V914
L23
L24
C41
C42
C43 ·002
C44 ·002
R34 1MΩ
R35 1MΩ
C52 16
L27 1400Ω
T2
UU3
V9
C58 01
C53 8
S10b S10a