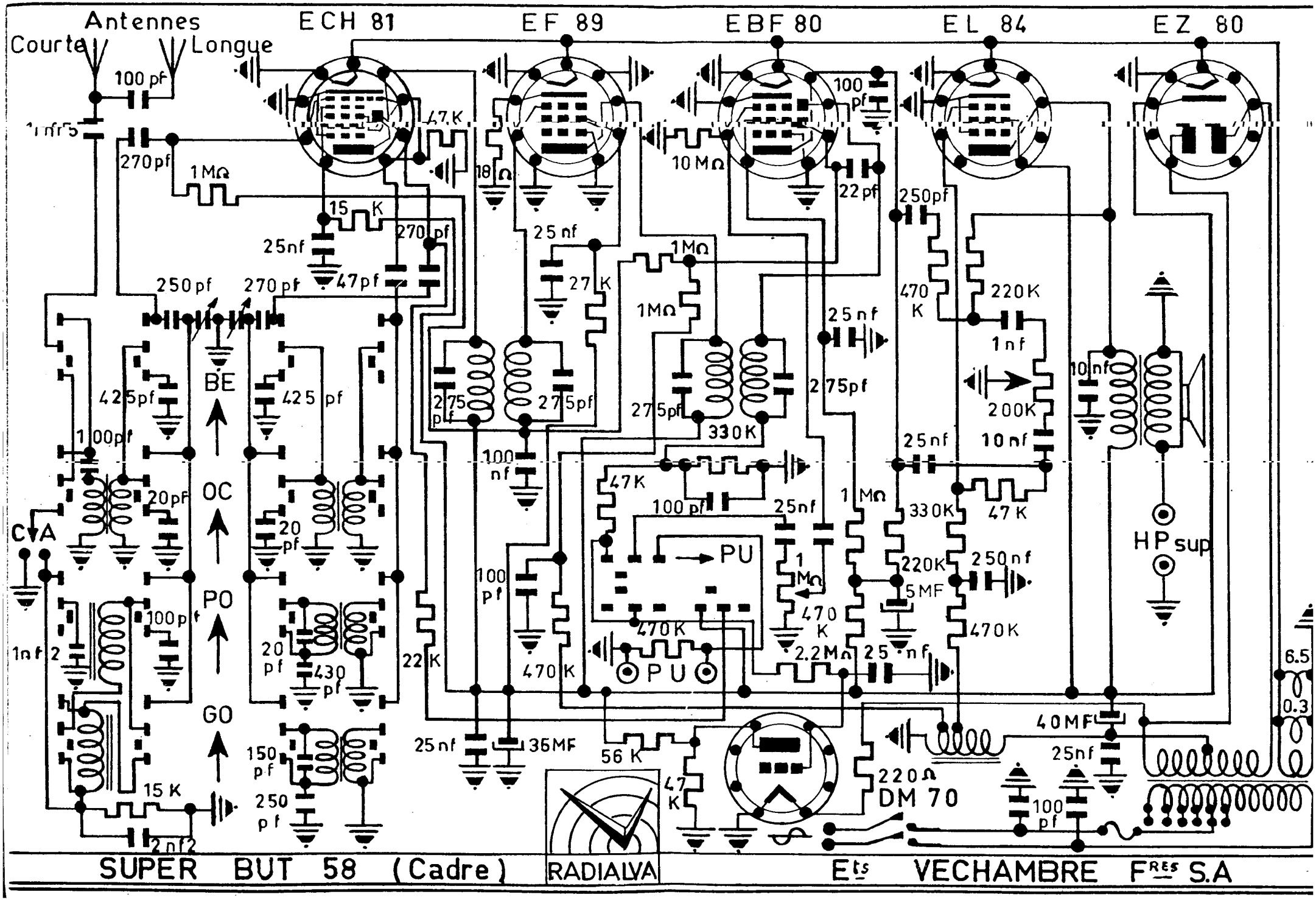
Antennes
Courte
Longue
ECH 81
EF 89
EBF 80
EL 84
EZ 80
100 pf
1 nf 5
270 pf
1 MΩ
47 K
18 Ω
10 MΩ
100 pf
22 pf
250 pf
15 K
25 nf
270 pf
47 pf
250 pf
270 pf
25 nf
27 K
1 MΩ
1 MΩ
470 K
220 K
1 nf
25 nf
BE
425 pf
425 pf
275 pf
275 pf
275 pf
275 pf
330 K
200 K
10 nf
10 nf
100 pf
100 nf
25 nf
20 pf
OC
20 pf
47 K
100 pf
25 nf
1 MΩ
330 K
47 K
C A
PU
1 MΩ
220 K
250 nf
HP sup
100 pf
PO
100 pf
470 K
5 MF
470 K
1 nf 2
20 pf
430 pf
22 K
470 K
470 K
PU
2.2 MΩ
25 nf
6.5
0.3
GO
150 pf
25 nf
35 MF
56 K
40 MF
25 nf
15 K
250 pf
47 K
220 Ω
DM 70
100 pf
2 nf 2
SUPER BUT 58 (Cadre)
RADIALVA
Ets VECHAMBRE Fres S.A