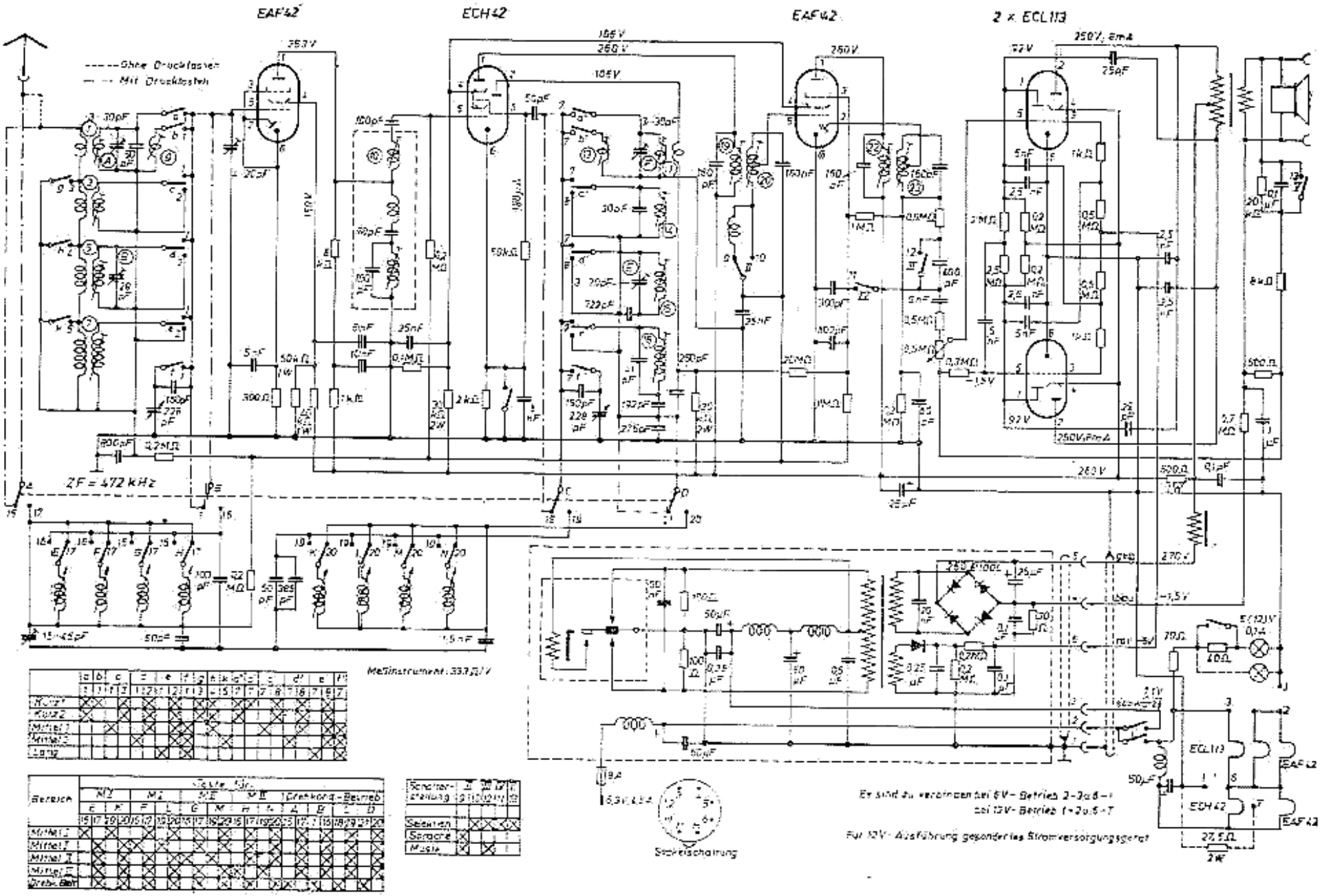Telefunken **Autosuper IIA 51 / IID 51**