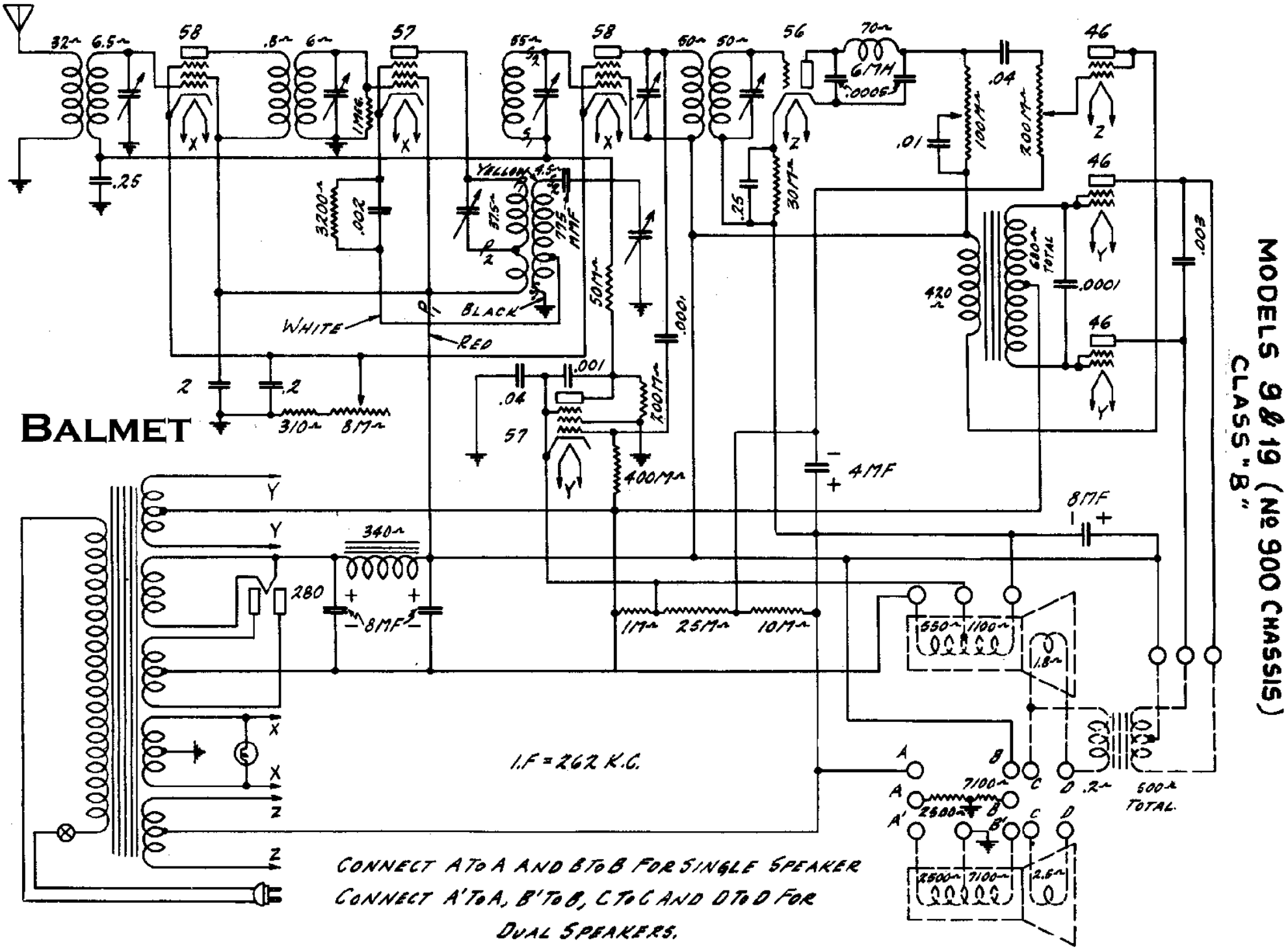MODELS 9 & 19 (No 900 CHASSIS)
CLASS "B"