Cv1	460 uuF	C9	70 pF	C21	200 pF	R1	5 k Ohm	R11	20 kOhm
A	5 a`50 uuF	C10	50 pF	C22	10000 pF	R2	10 kOhm	R12	100 kOhm
C`	42 pF	C11	500 pF	C23	2000 pF	R4	50 kOhm	R13	200 kOhm
C1	1000 pF	C12	50000 pF	C24	50 pF	R5	20 kOhm	R14	40 kOhm
C2	500 pF	C13	210 pF	C25	5000 pF	R6	40 kOhm	R15	5 kOhm
C3	15 pF	C14	210 pF	C26	0, 1 uF	R7	200 Ohm	R16	2 Meg
C4	2400 pF	C15	50000 pF	C27	8 pF	R8	0, 1 Meg	R17	2 Meg
C5	0, 1 uF	C16	200 pF	C28	16 pF	R9	1 Meg	R18	0, 5 Meg
Cv2	460 uuF	C17	10000 pF	C29	10000 pF	R10	5000 Ohm		
C6	-30 pF	C18	50000 pF	C30	50000 pF				
C7	350 pF	C19	210 pF	C31	2 à 5 uuF				
C8	150 pF	C20	210 pF	C32	100 pF				

ZF = 472 kHz

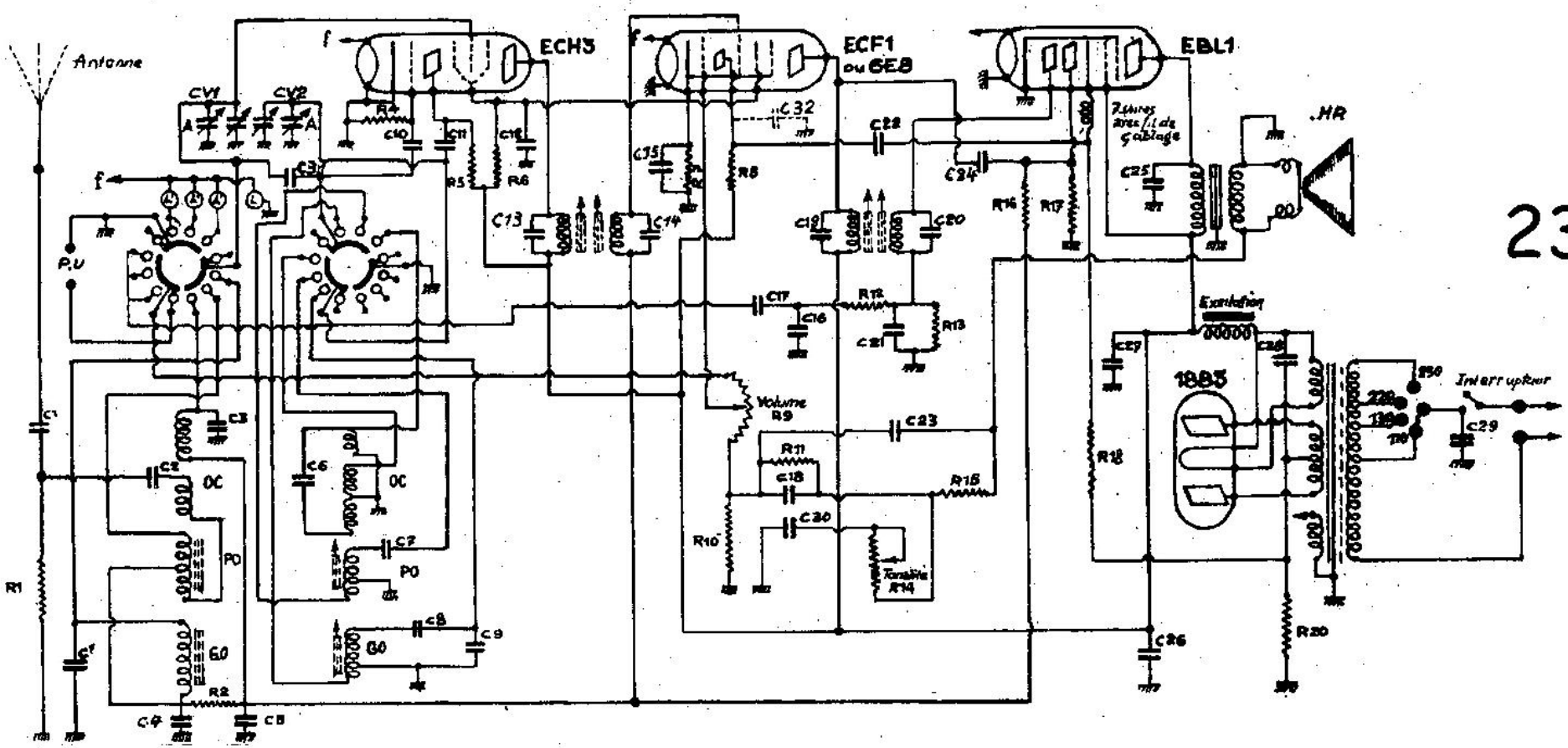

234

NOVAK