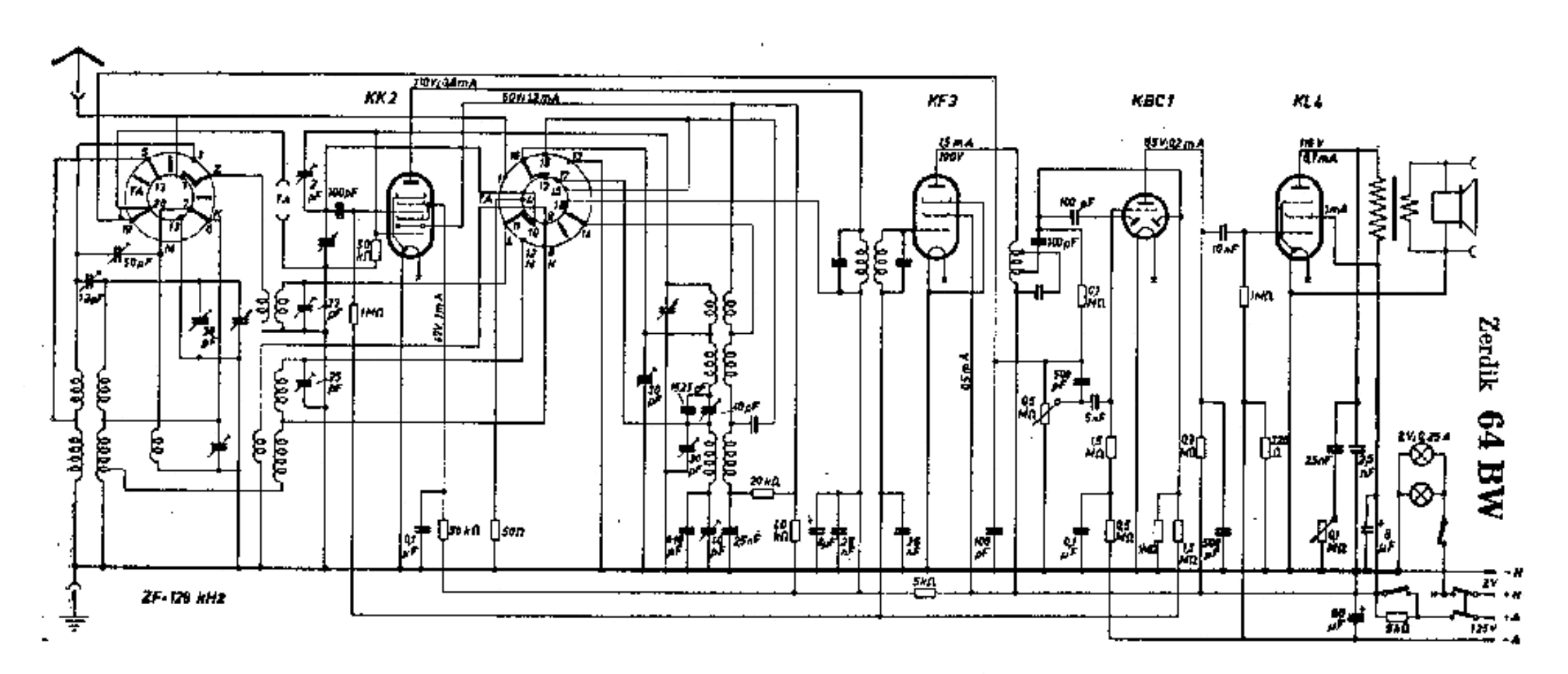
KK2
KF3
KBC1
KL4
ZF-129 kHz
Zerdik 64 BW