# Radione 538 U

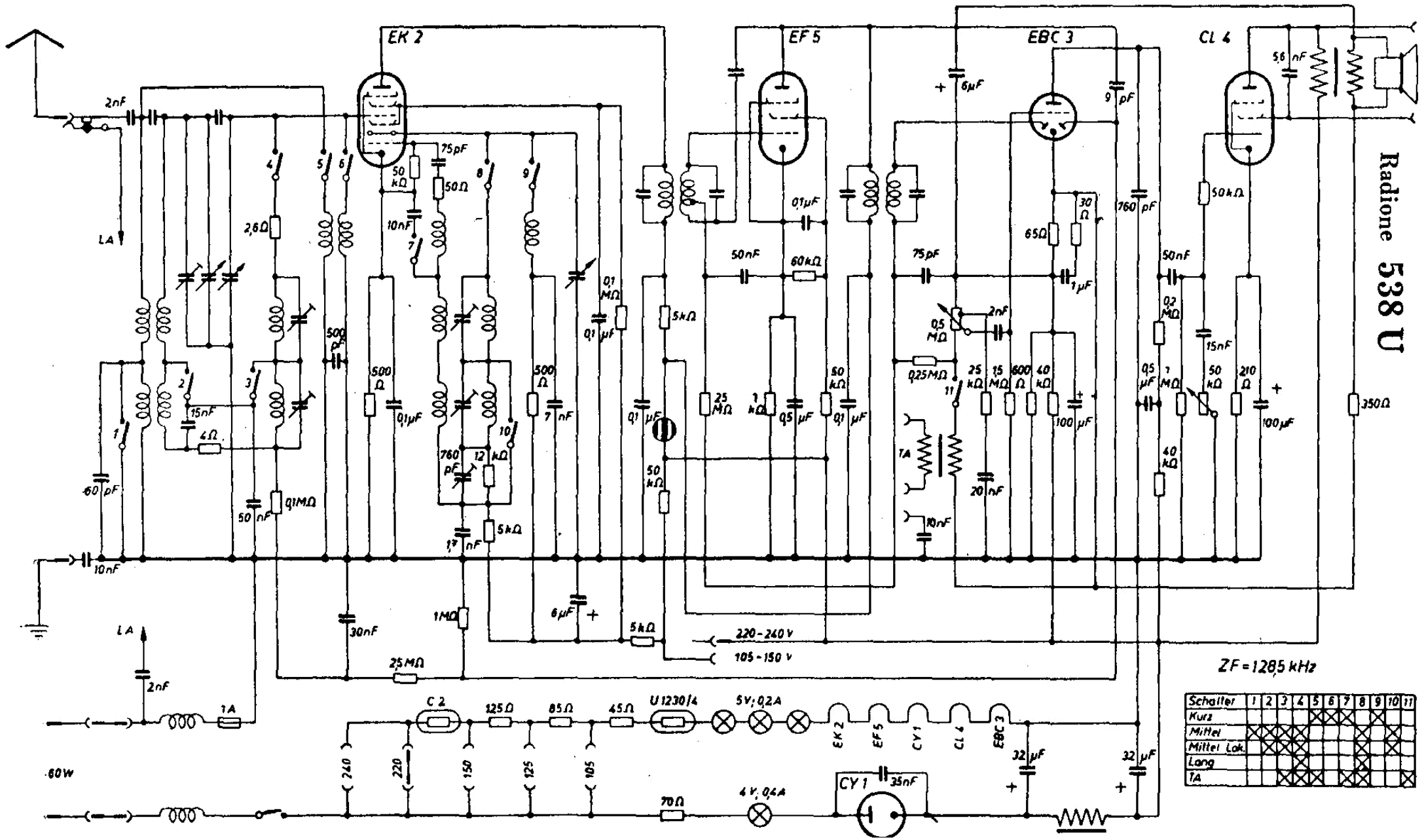


| Schalter | 1 | 2 | 3 | 4 | 5 | 6 | 7 | 8 | 9 | 10 | 11 |
|---|---|---|---|---|---|---|---|---|---|---|---|
| Kurz | | | | | X | X | X | | X | | |
| Mittel | X | X | X | X | | | | X | | X | |
| Mittel Lok. | | X | X | X | | | | X | | X | |
| Lang | | | | X | | | | X | | | |
| TA | | | X | X | X | | X | X | | | X |