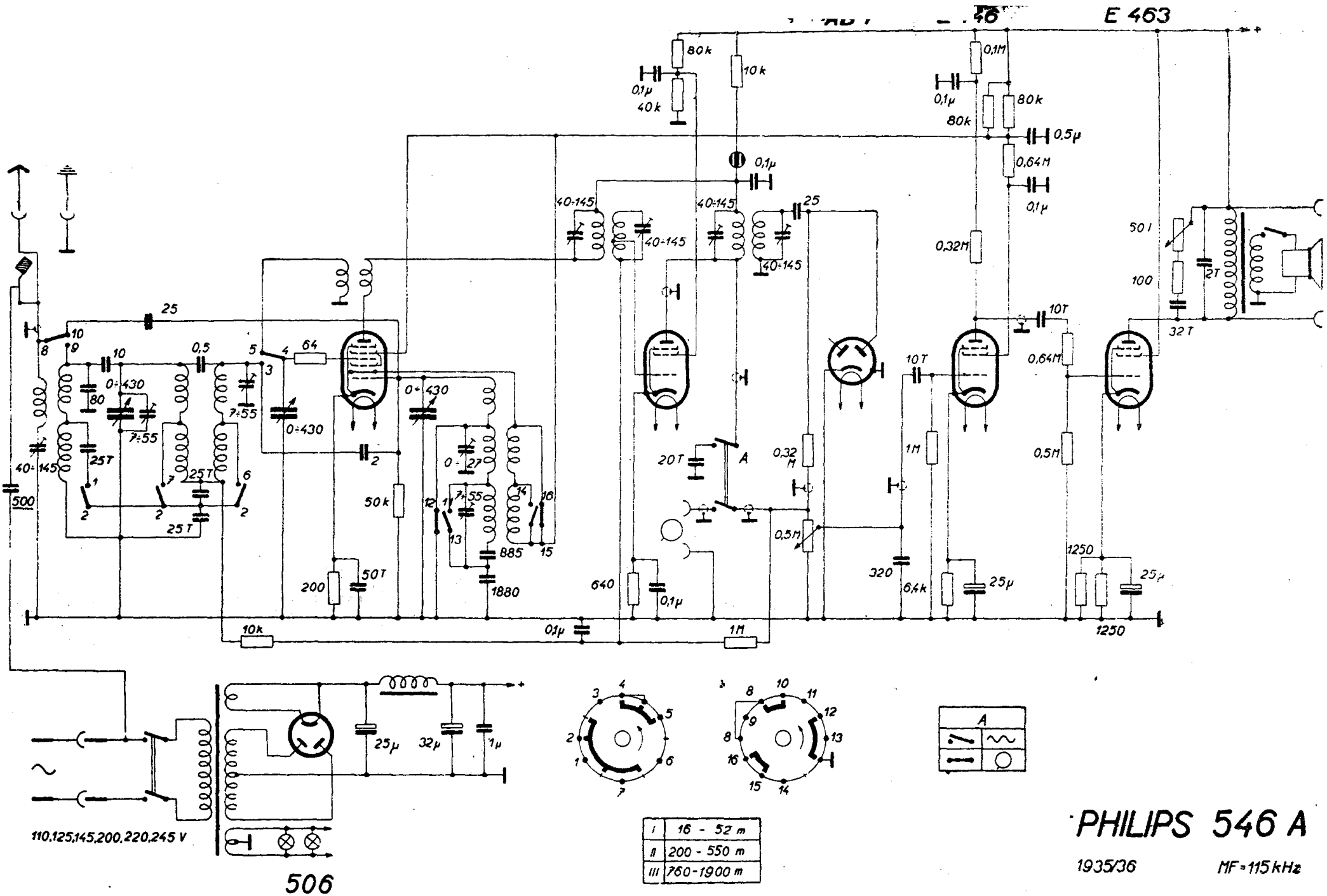

I	16 - 52 m
II	200 - 550 m
III	760-1900 m

PHILIPS 546 A

1935/36 MF = 115 kHz