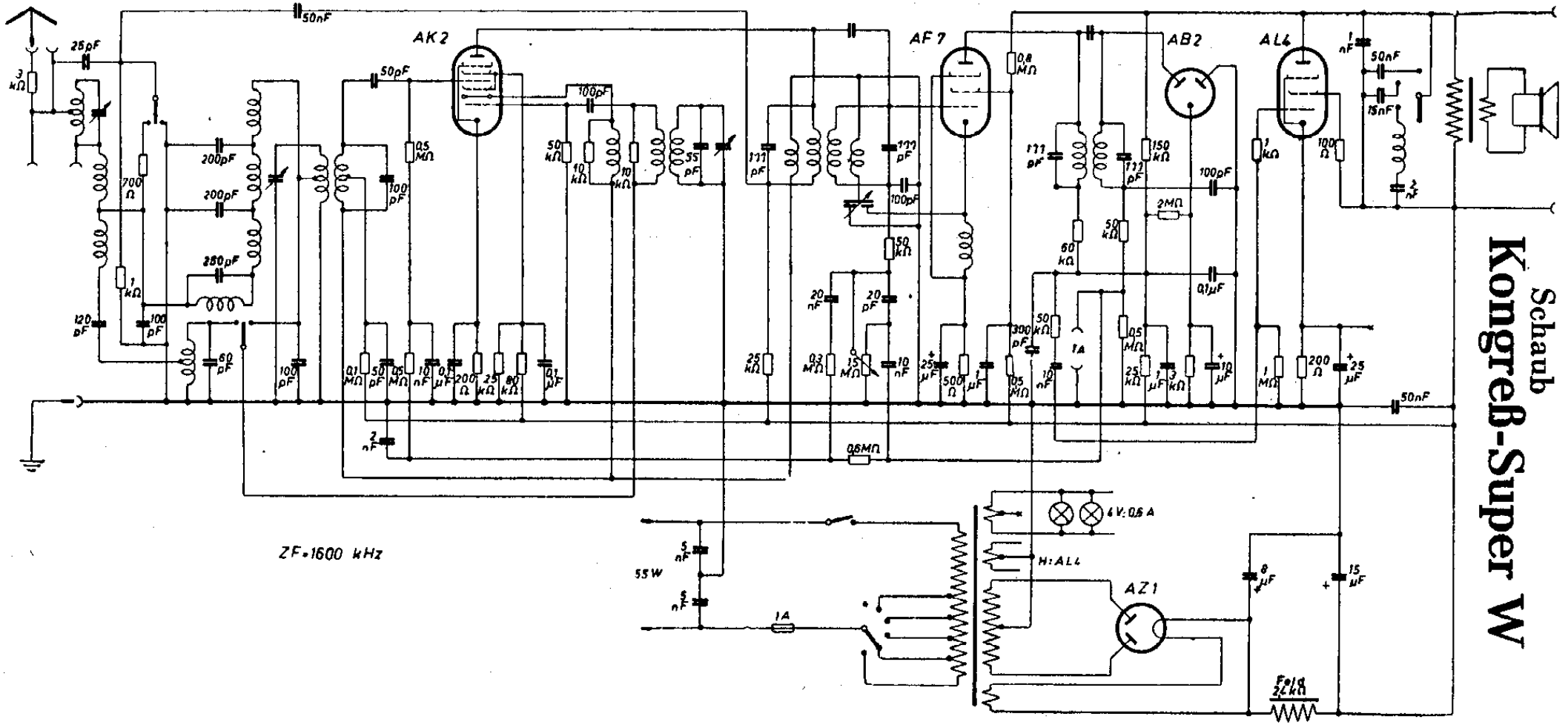

Schaub
Kongreß-Super W