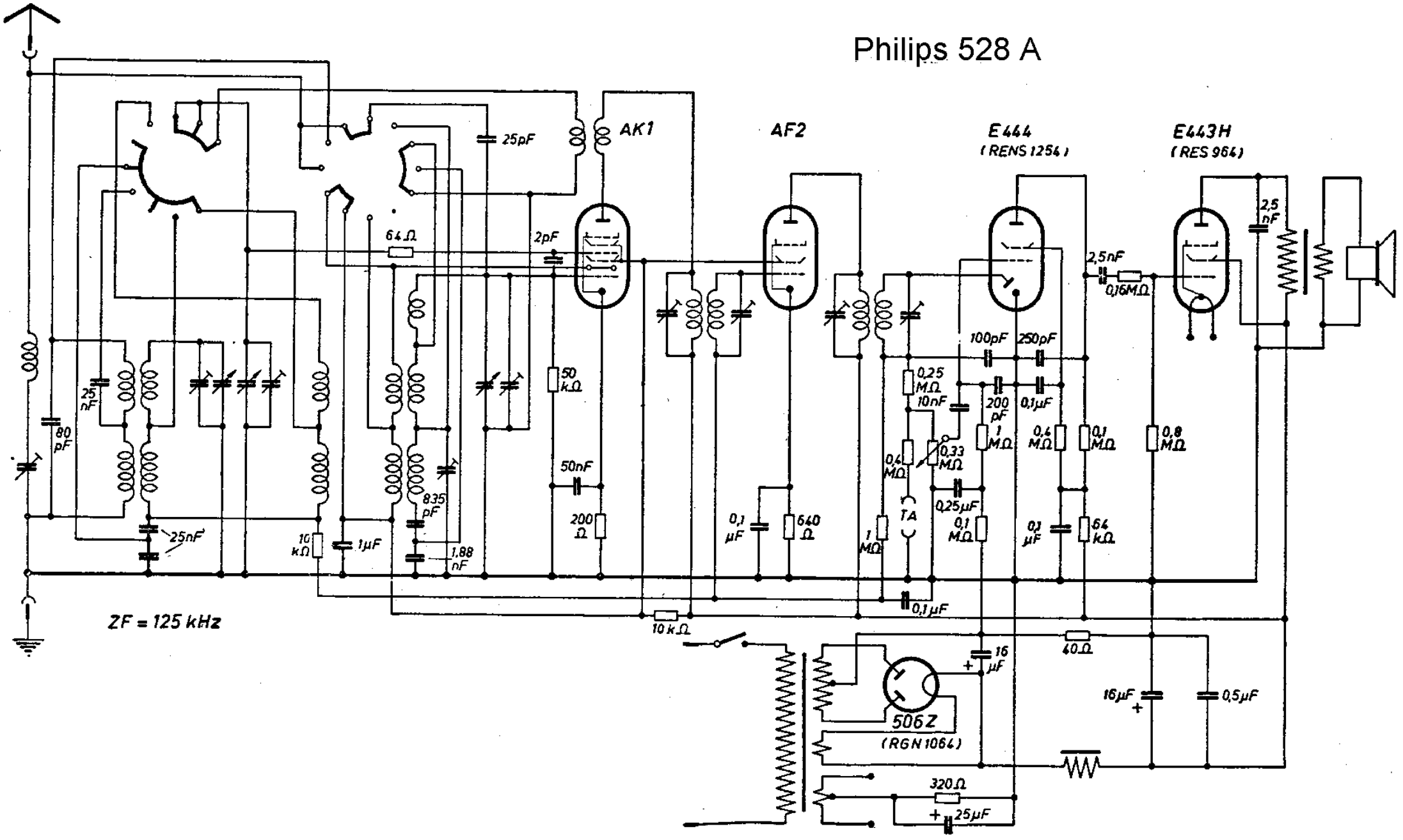Philips 528 A