# Minerva 396 U (GW)

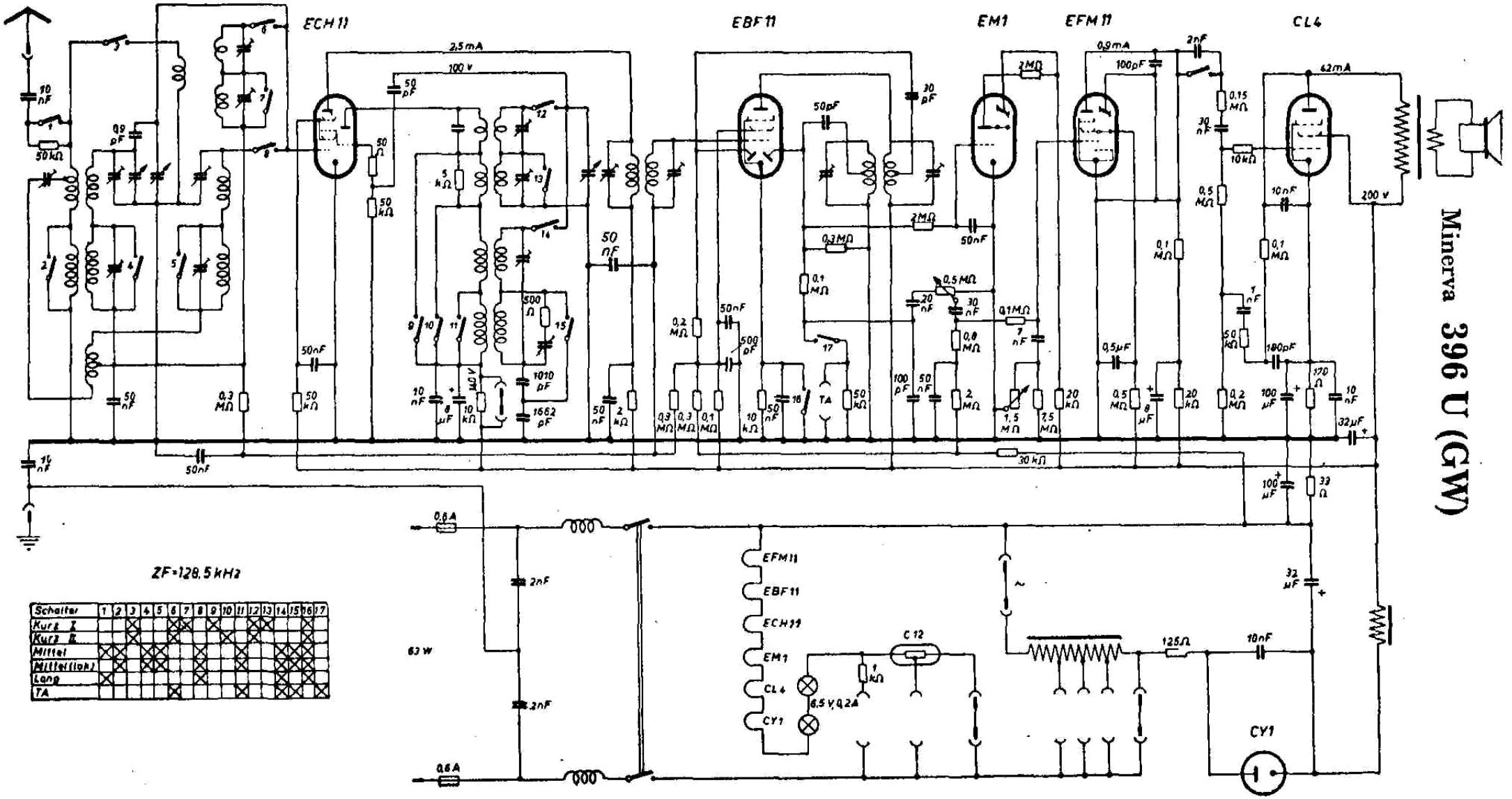


ZF=128,5 kHz

| Schalter | 1 | 2 | 3 | 4 | 5 | 6 | 7 | 8 | 9 | 10 | 11 | 12 | 13 | 14 | 15 | 16 | 17 |
|---|---|---|---|---|---|---|---|---|---|---|---|---|---|---|---|---|---|
| Kurz I | | | X | | | X | X | | X | | | X | X | | | X | |
| Kurz II | | | X | | | X | | | | X | | X | | | | X | |
| Mittel | X | X | | X | X | | | X | | | X | | | X | X | X | |
| Mittel (lok) | | X | | X | X | | | X | | | X | | | X | X | X | |
| Lang | X | | | | | | | X | | | | | | X | X | X | |
| TA | | | | | | X | | | | | X | | | X | X | | X |