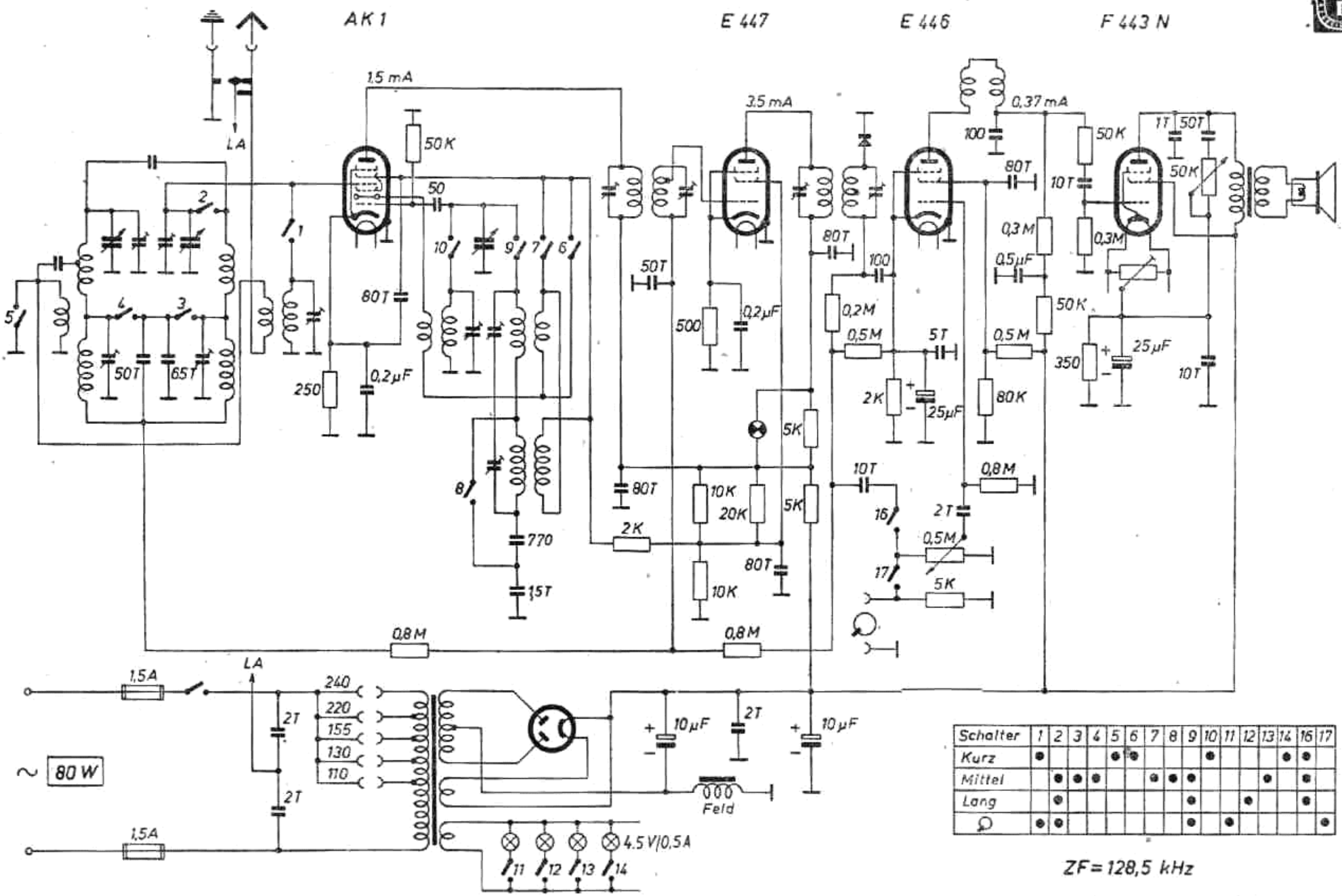

Schalter	1	2	3	4	5	6	7	8	9	10	11	12	13	14	16	17
Kurz	●				●	●				●				●	●	
Mittel		●	●	●			●	●	●				●		●	
Lang		●							●			●			●	
⌕	●	●							●		●					●

ZF = 128,5 kHz

1561

Minerva 35 KV