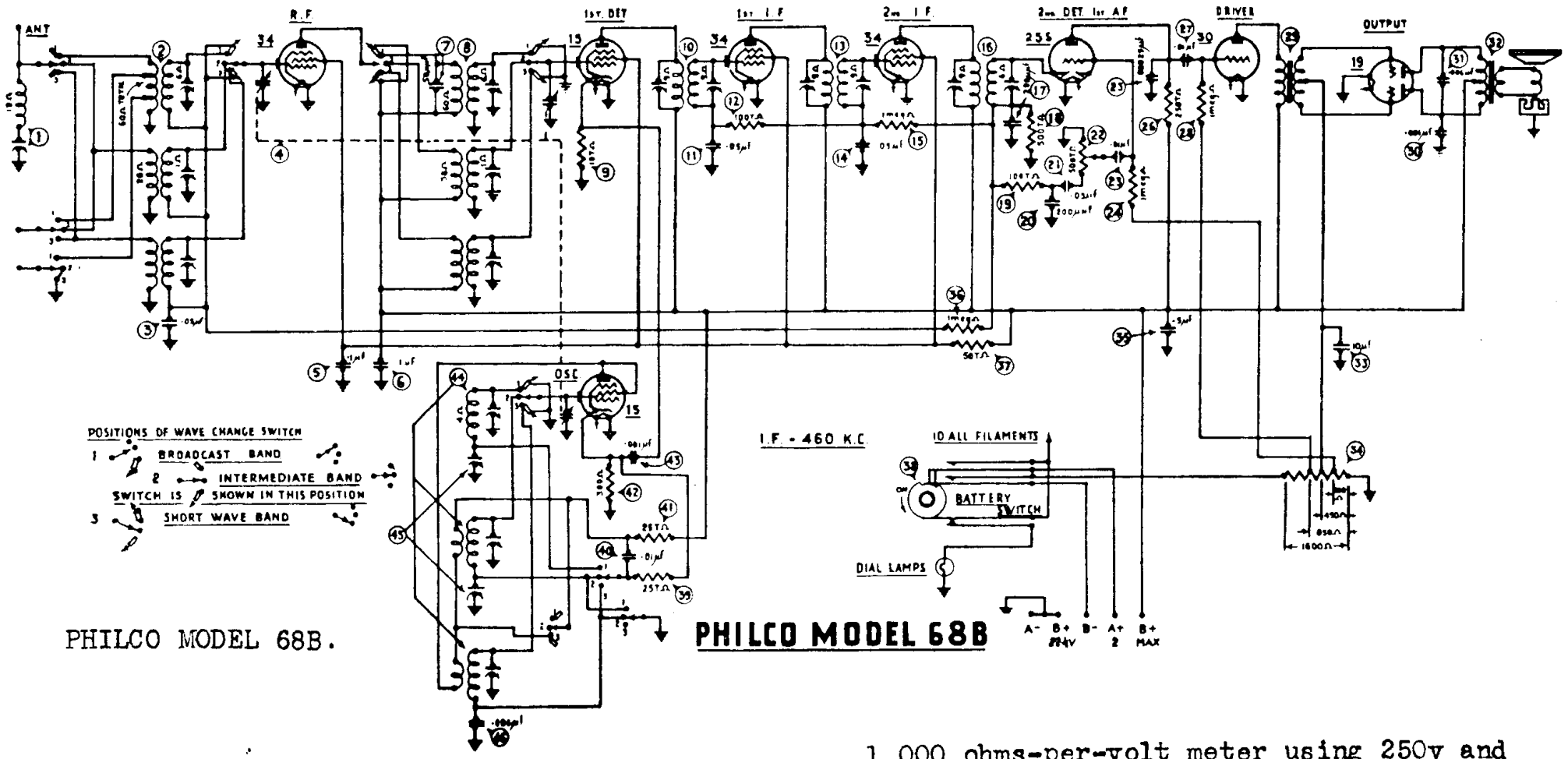

PHILCO MODEL 68B.

VALVE SOCKET VOLTAGES
Measured to Ground

VALVE	34	15	15	34	34	25S	30	19
..	R.F.	Osc.	1st Det.	1st I.F.	2nd I.F.	2nd Det.	Driver	Output
Point P.	155	70	155	155	155	70	150	150
S.G.	50	70	50	50	50	-	-	-
K.	-	.3	4	-	-	-	-	-

Bias Resistor Voltages, measuring from the earthed end:- -2½v, -6½v, -12v, -22½v.

The above voltages were measured with a 1,000 ohms-per-volt meter using 250v and 50v scales. The volume control was in the maximum position with the aerial terminal shorted to earth. Use Fig. 1 for test points.

BATTERY SWITCH. The battery switch on Model 68B is of the three position type. The first movement in a clockwise direction switches on the receiver and dial lamps. A further movement of the switch in a clockwise direction switches off the dial lamps. Rotating the battery switch in an anti-clockwise direction will switch off the receiver.