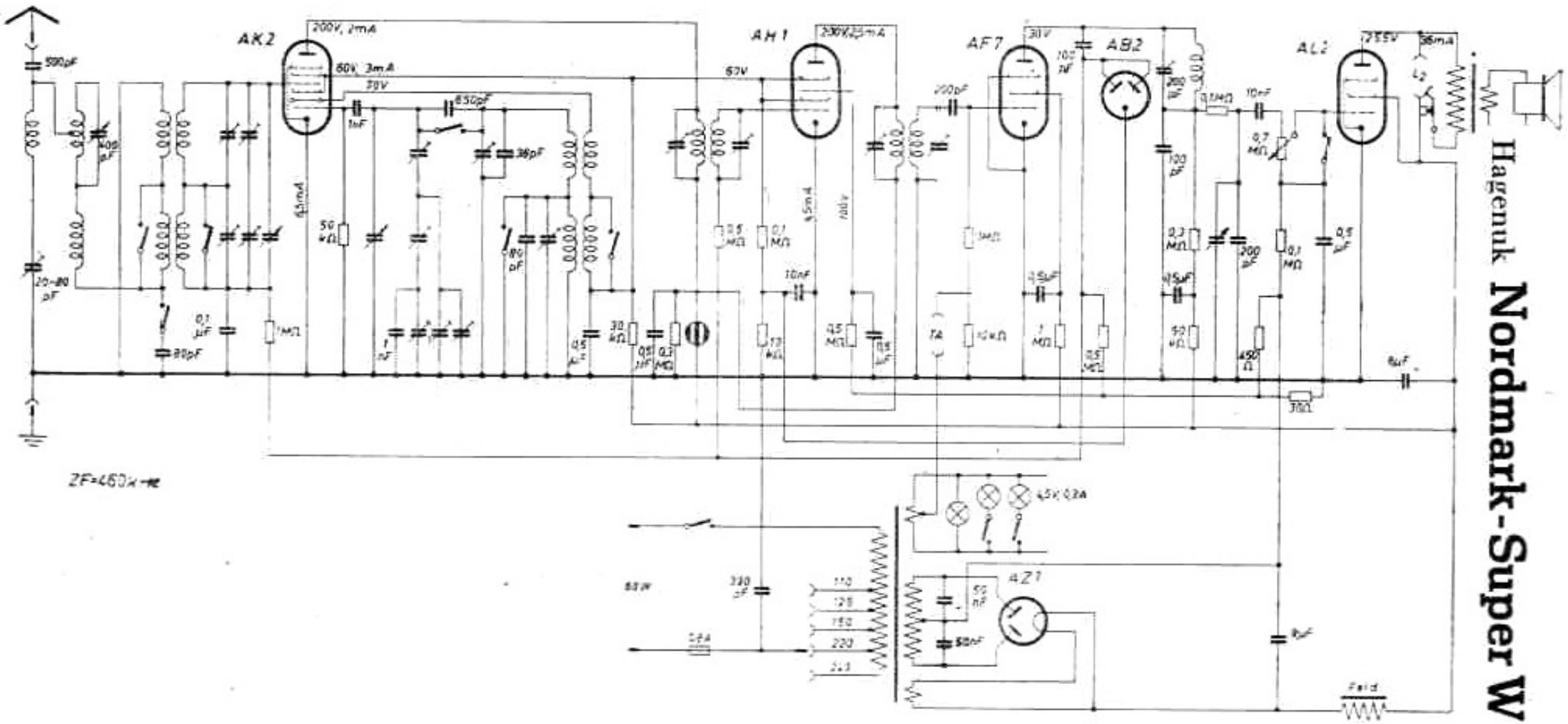Hagenuk Nordmark-Super W