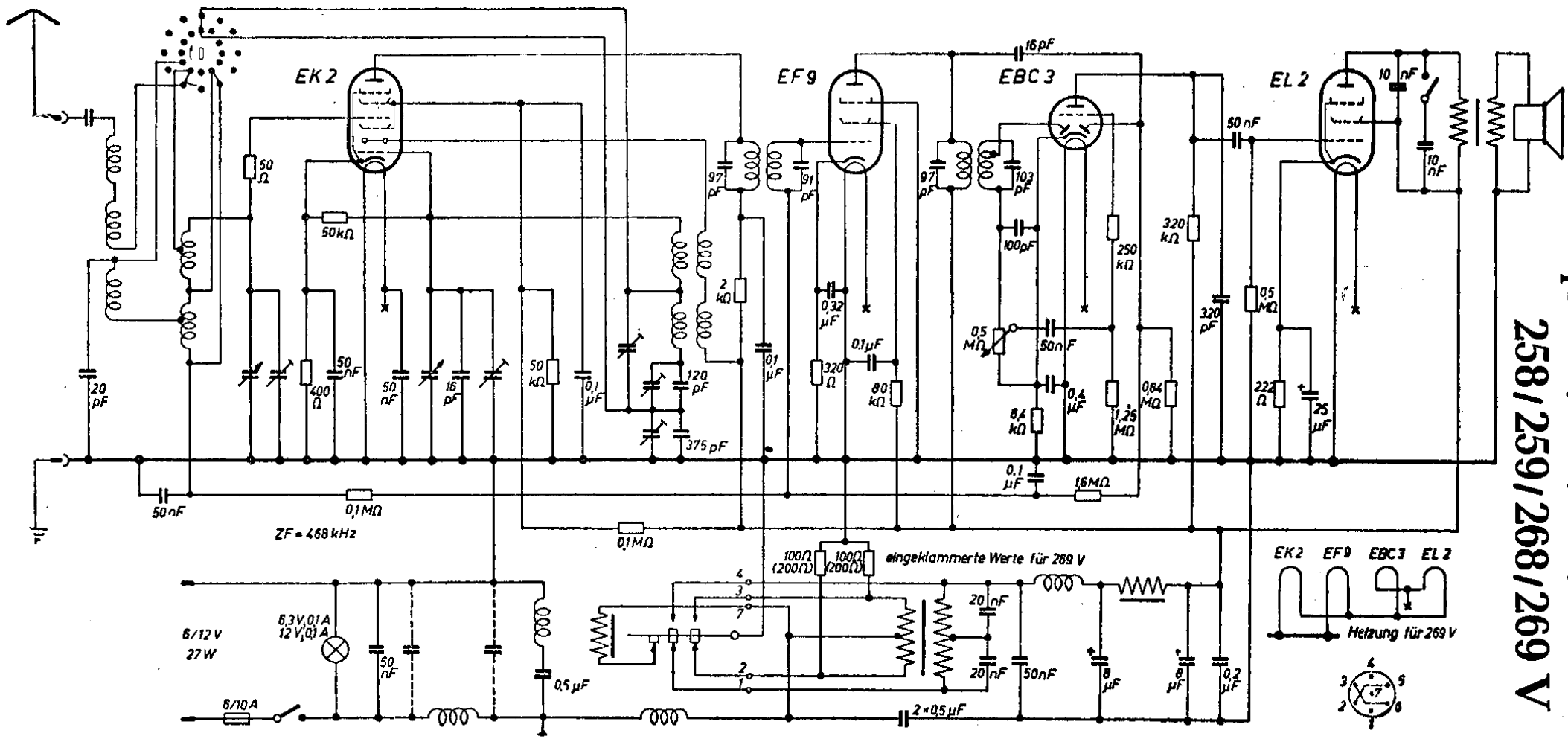

Philips 258/259/268/269 B
258/259/268/269 V