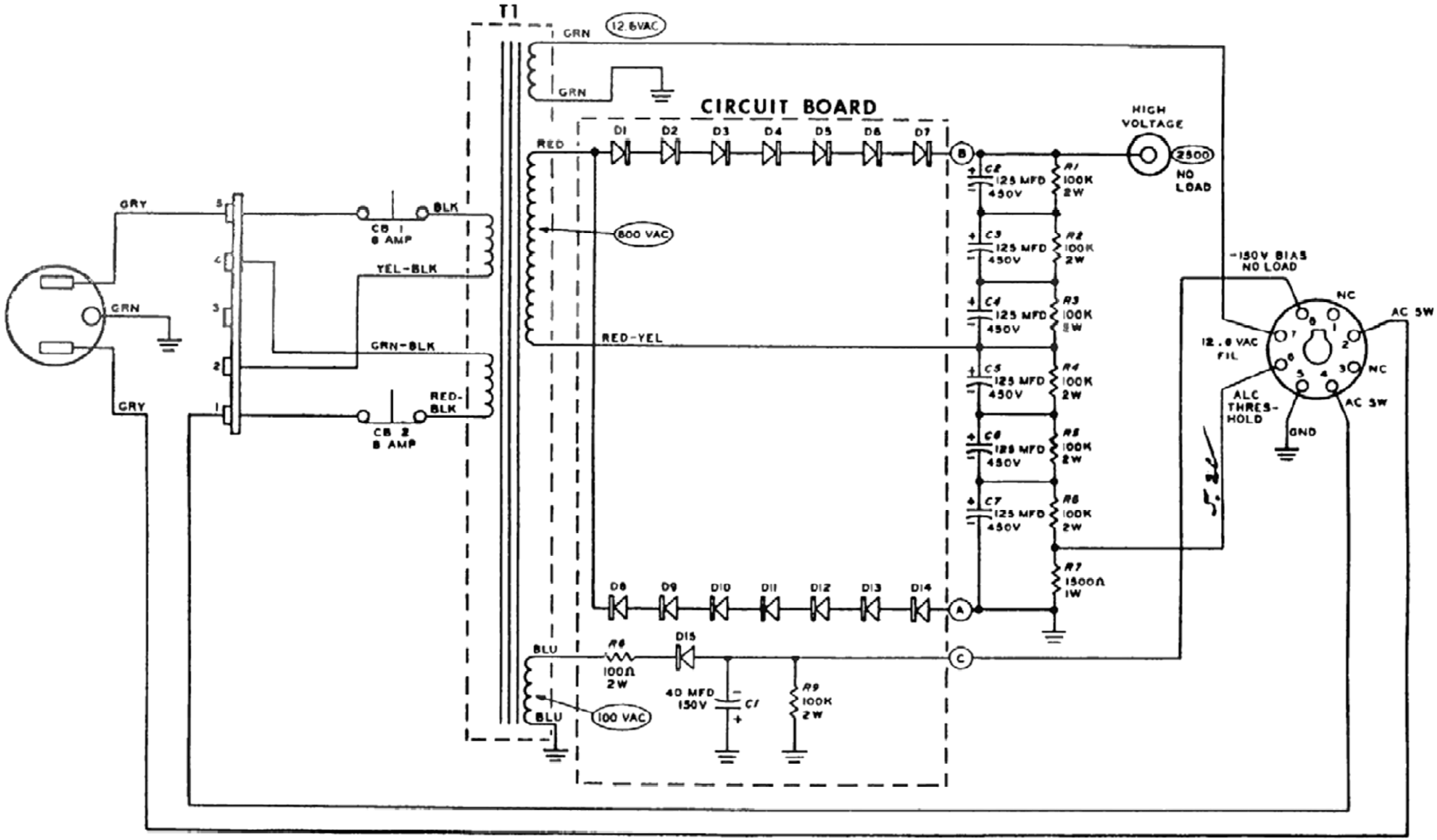

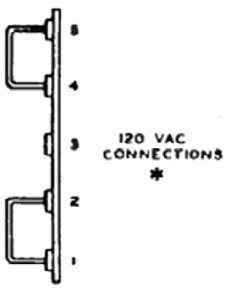

120 VAC CONNECTIONS *

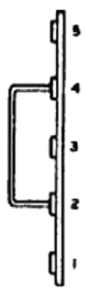

240 VAC CONNECTIONS *

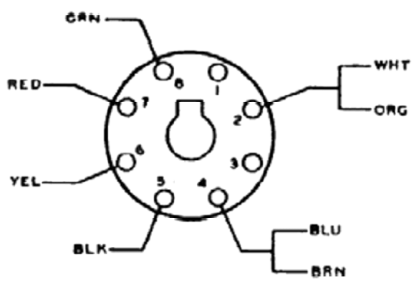

CABLE CONNECTOR

ALL RESISTOR VALUES ARE IN OHMS (K = 1000).
ALL CAPACITOR VALUES ARE IN μfd.
◯ INDICATES VOLTAGE READING.
ALL VOLTAGES ARE DC POSITIVE UNLESS MARKED OTHERWISE.
ALL VOLTAGES ARE MEASURED FROM POINT INDICATED TO CHASSIS GROUND, EXCEPT AC VOLTAGES ON POWER TRANSFORMER WINDINGS.
VOLTAGE READINGS TAKEN WITH AN 11 MEGOHM INPUT VTVM. A HIGH VOLTAGE DC PROBE SHOULD BE USED WITH THE VTVM TO MEASURE THE B+ VOLTAGE.
VOLTAGES MAY VARY ±10%.
REFER TO THE X-RAY VIEW FOR THE PHYSICAL LOCATION OF PARTS ON THE CIRCUIT BOARD.

* OPTIONAL: SEE RIGHT-HAND COLUMN ON PAGE 12.

SCHEMATIC OF THE HEATHKIT® AC POWER SUPPLY MODEL HP-24