# Kapsch Viktoria G/GW

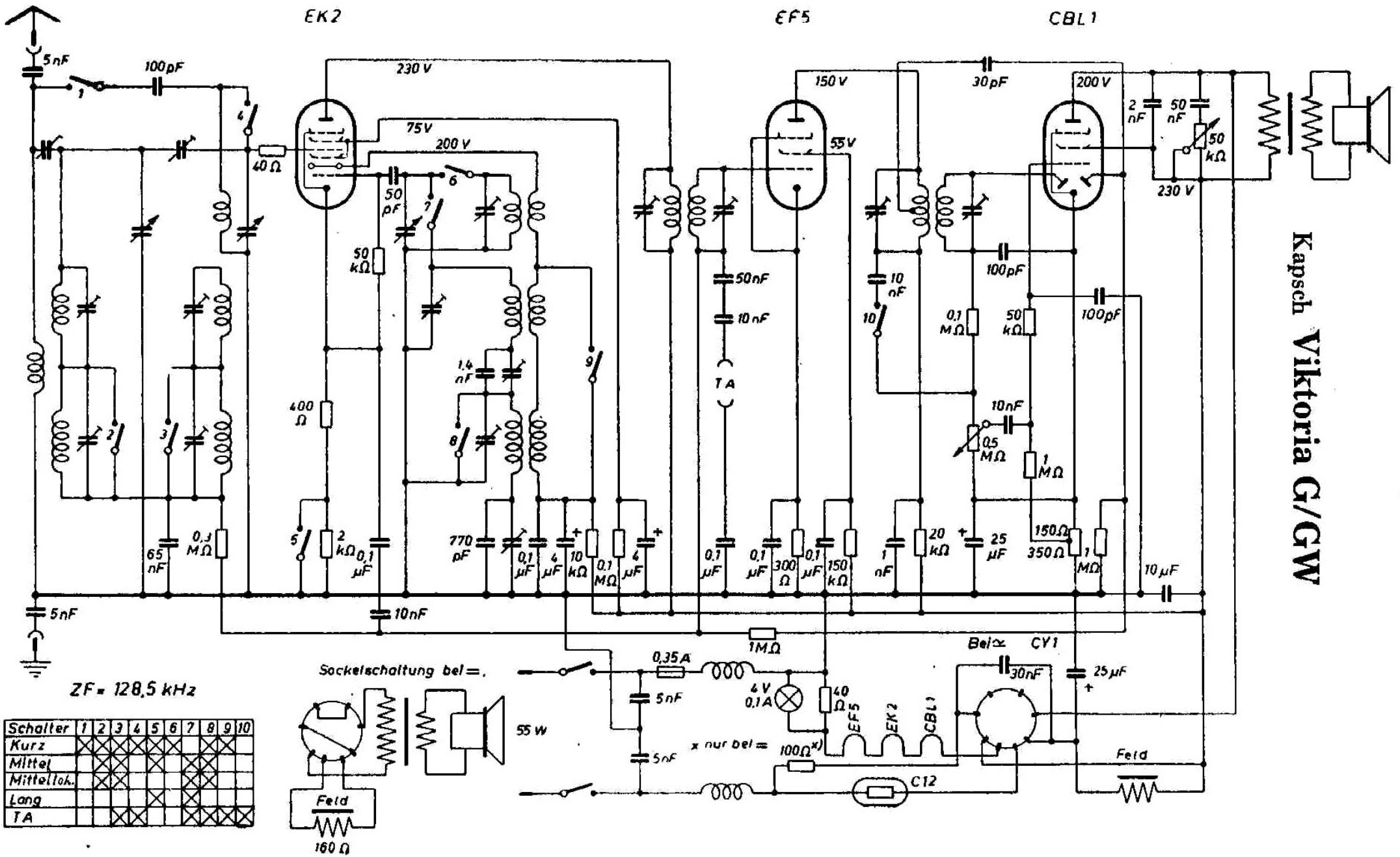


| Schalter | 1 | 2 | 3 | 4 | 5 | 6 | 7 | 8 | 9 | 10 |
|---|---|---|---|---|---|---|---|---|---|---|
| Kurz | X | X | X | X | X | X | | X | X | |
| Mittel | | X | X | | X | | X | X | | |
| Mittellok. | | X | X | | | | X | X | | |
| Lang | | | | | X | | X | | | |
| TA | | | X | X | | | X | X | X | X |