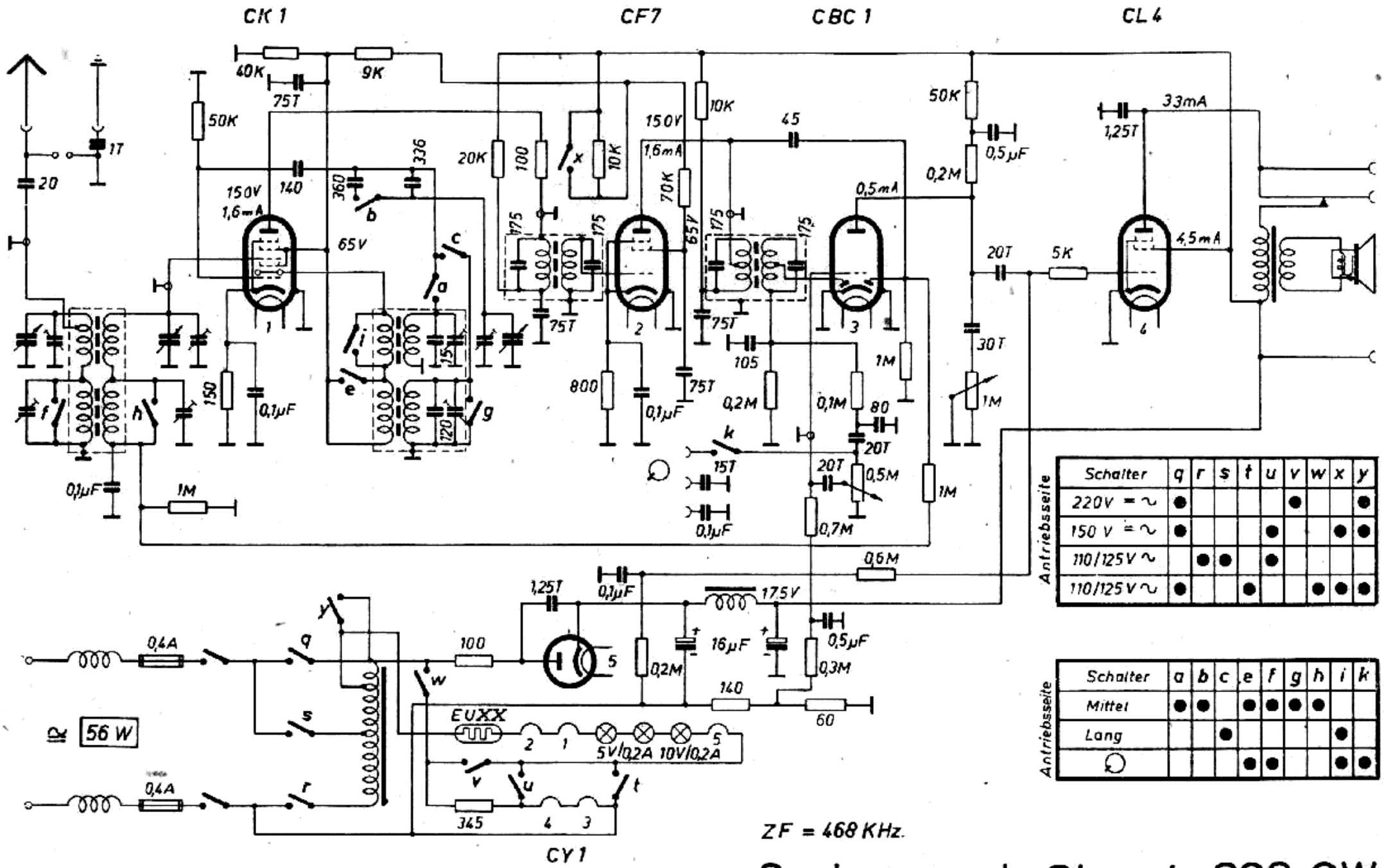

Antriebsseite	Schalter	q	r	s	t	u	v	w	x	y
	220V = ~	●					●			●
	150 V = ~	●				●			●	●
	110/125V ~		●	●		●				
	110/125V ~	●			●			●	●	●

Antriebsseite	Schalter	a	b	c	e	f	g	h	i	k
	Mittel	●	●		●	●	●	●		
	Lang			●					●	
	⟲				●	●			●	●

Sachsenwerk Olympia 382 GW

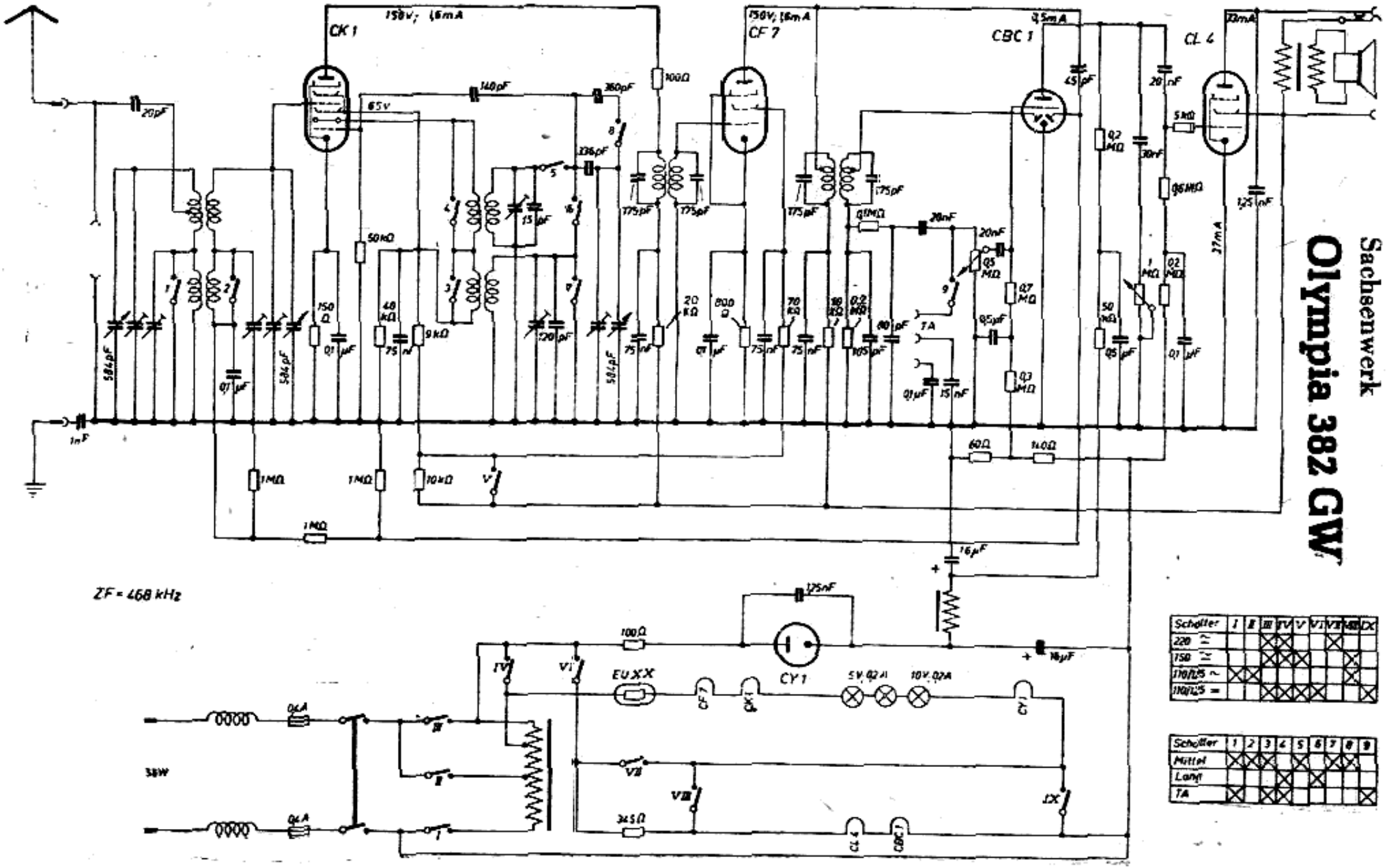
Sachsenwerk
Olympia 382 GW
CK 1
CF 7
CBC 1
CL 4
CY 1
EU XX
ZF = 468 kHz
Schalter
Mittel
Lang
TA