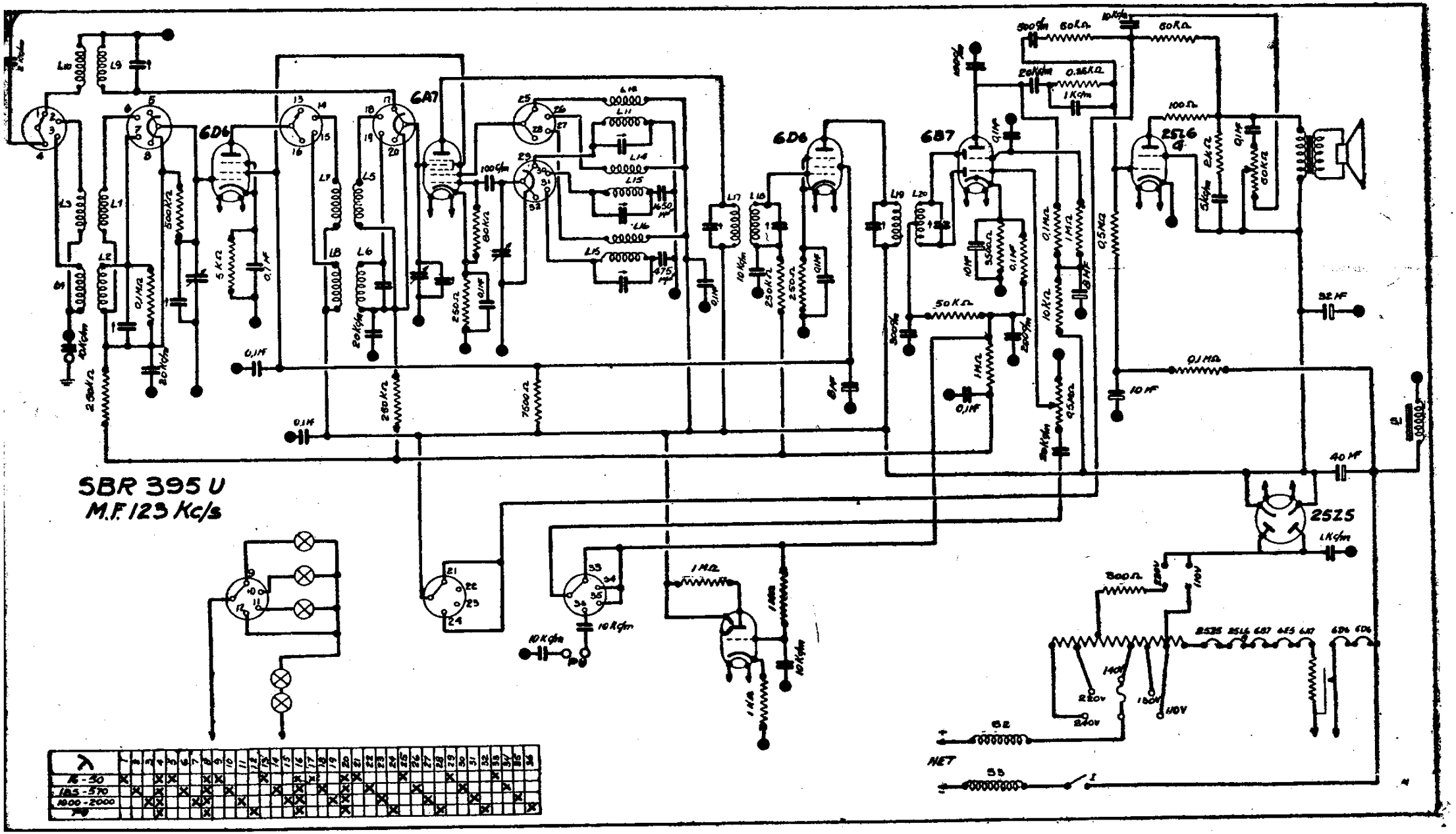

λ	1	2	3	4	5	6	7	8	9	10	11	12	13	14	15	16	17	18	19	20	21	22	23	24	25	26	27	28	29	30	31	32	33	34	35	36
16-50	X			X	X			X	X				X			X	X			X	X				X				X				X			
185-570		X		X		X		X		X				X		X		X		X		X				X				X				X		
1000-2000			X	X			X	X			X				X	X			X	X			X				X				X				X	
PO				X				X				X				X				X				X				X				X				X