E 3

LESA mod. LH9 Curliss CR-1

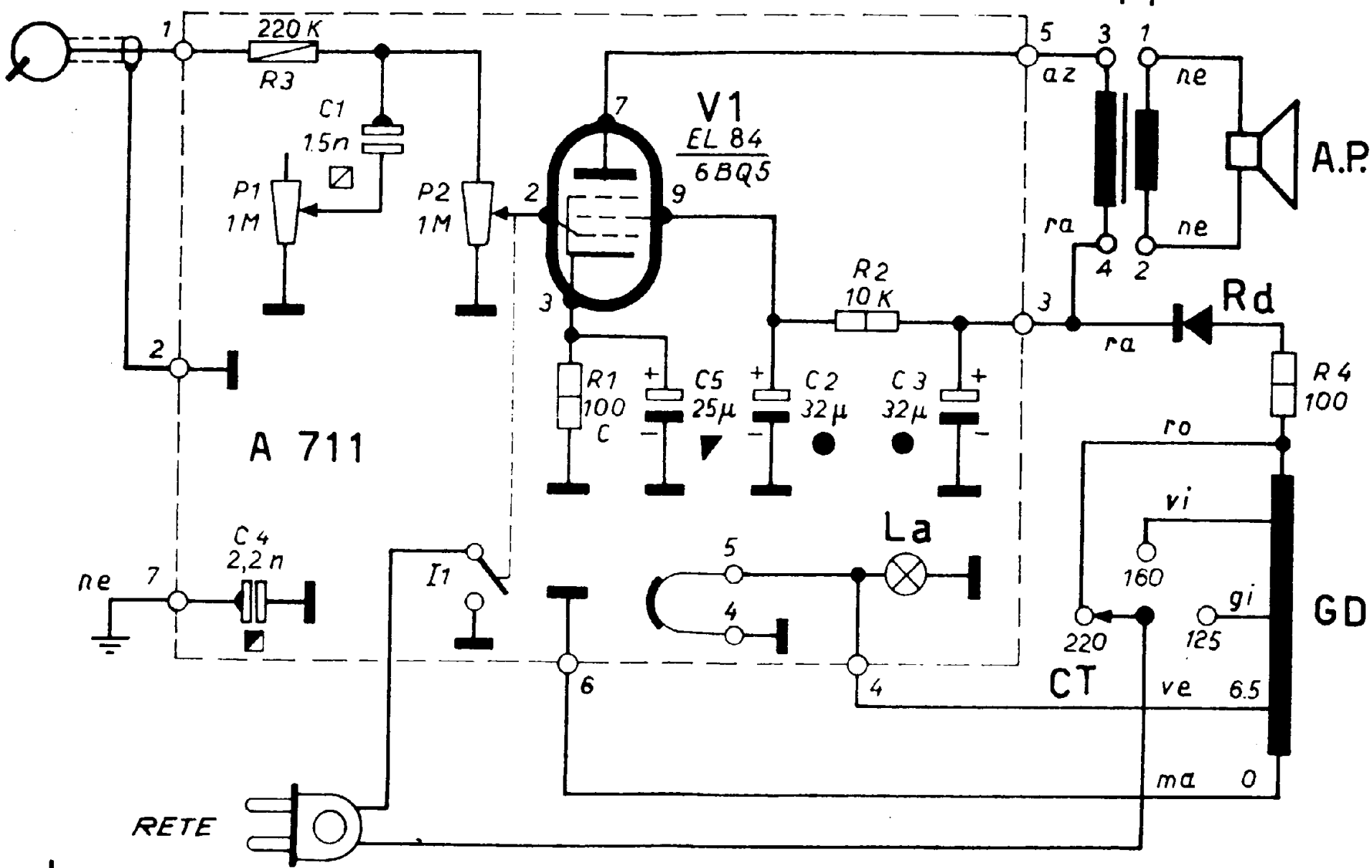

MASSA GIRADISCHI

MASSA CIRC. STAMP.

P1 = Dm 18579/4 opp. Dm 18579/7 ; P2 = Dm 18319/2 opp. Dm 18319/5

LA = Dm 18540 Rd = Dm 14492 opp. Dm 14604 T1 = Dm 18062

AP = Dm 18326 GD = Da 4291 CT = Dm 18332/4