6 W 68

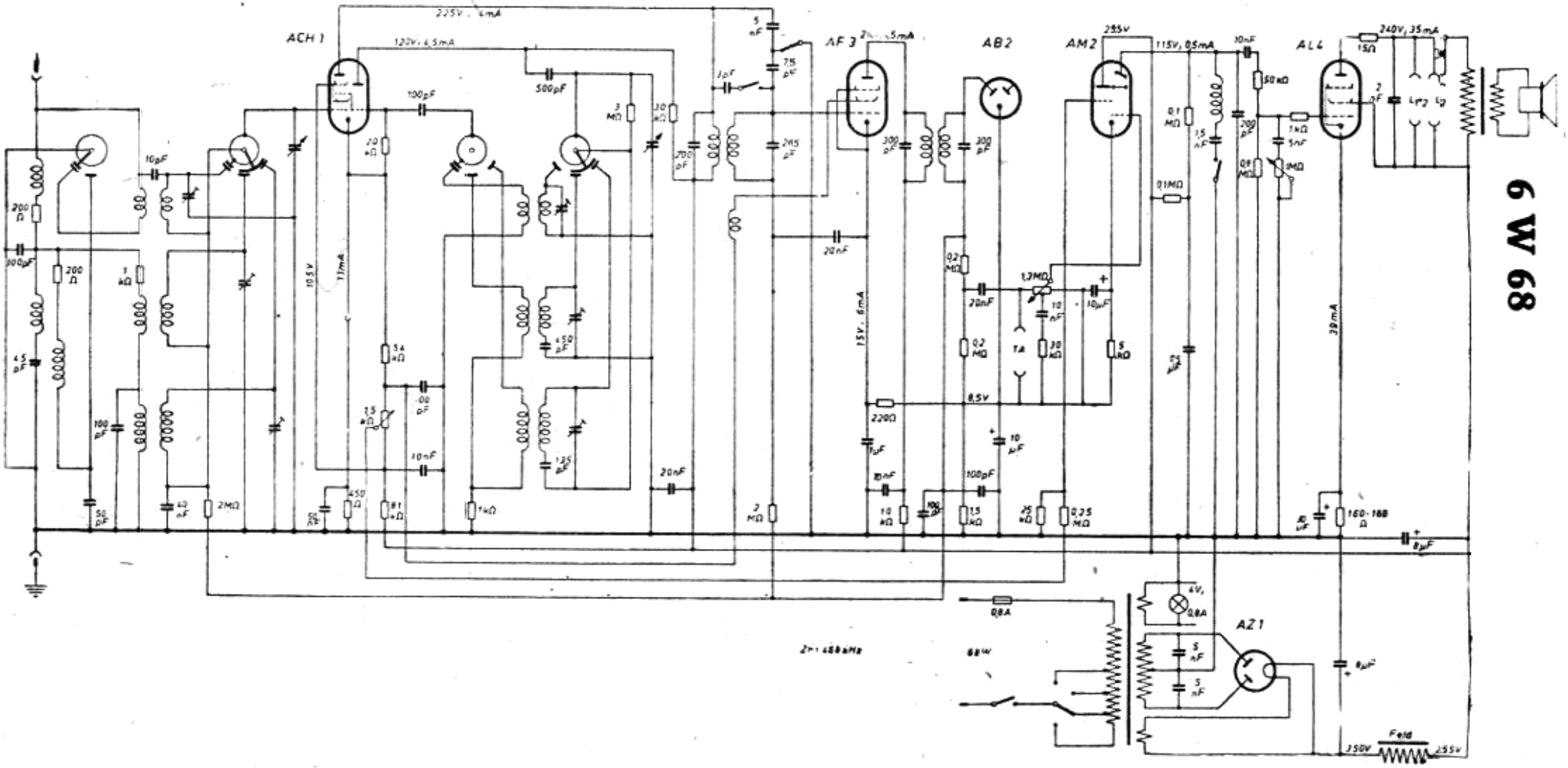

ACH 1
AF 3
AB 2
AM 2
AL 4
AZ 1
225V, 4mA
120V, 4,5mA
115V, 0,5mA
240V, 35mA
15V, 6mA
39mA
10,5V
11mA
8,5V
TA
Feld
350V
255V