4 W 648 M

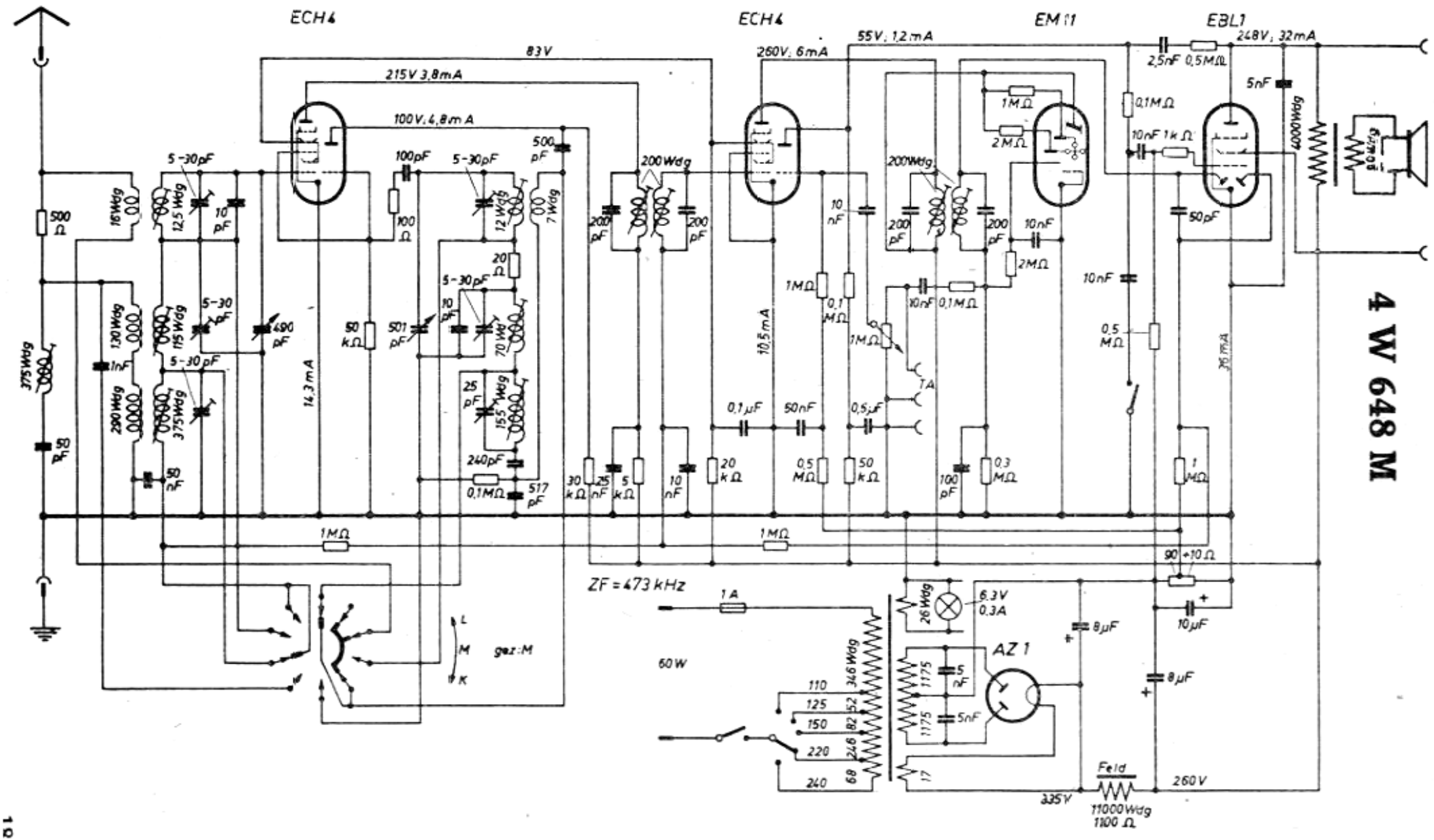

ECH4
ECH4
EM11
EBL1
83V
215V 3,8mA
100V; 4,8mA
260V; 6mA
55V; 1,2mA
248V; 32mA
ZF = 473 kHz
AZ 1
60W
gez:M
Feld
11000 Wdg
1100 Ω
335V
260V