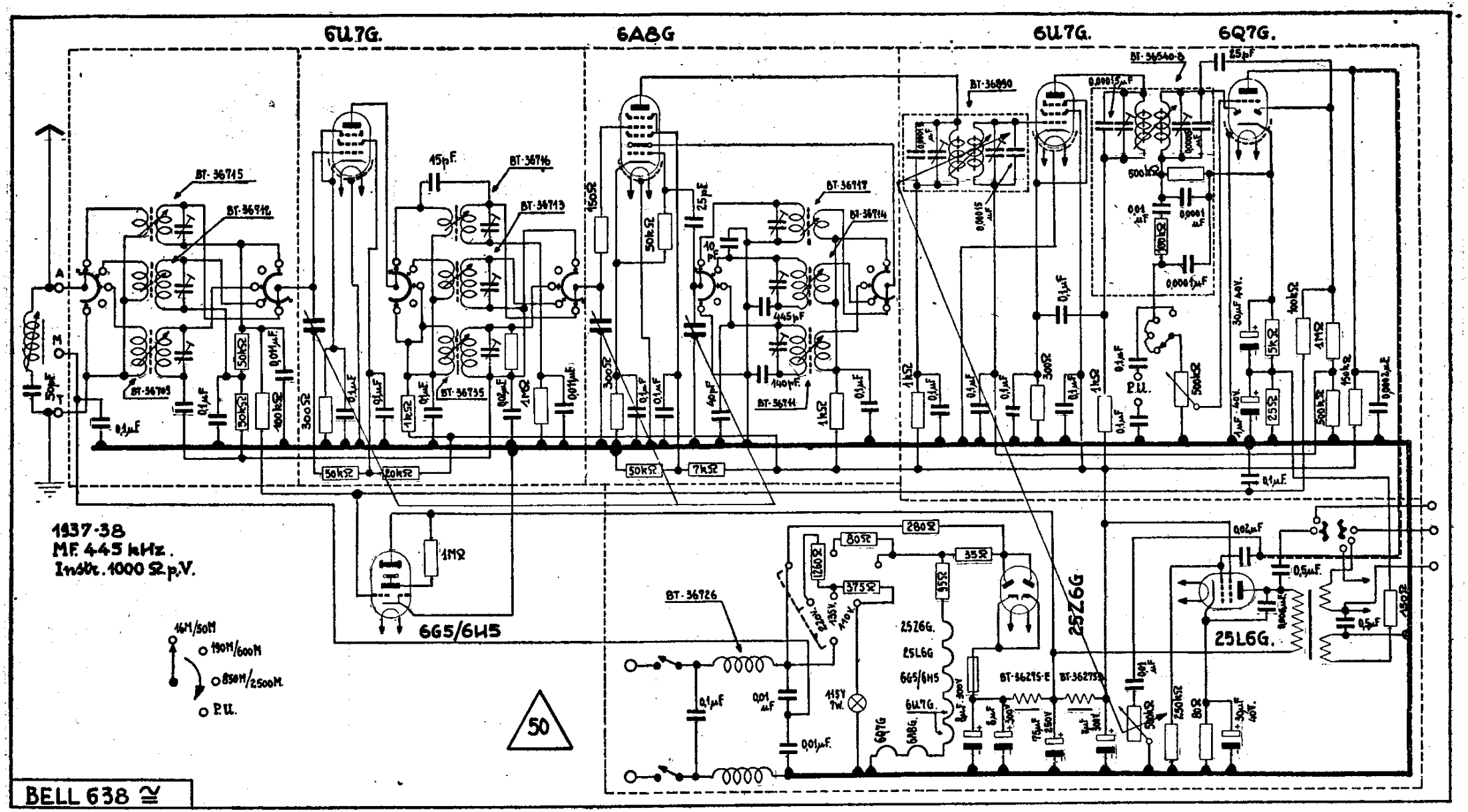
6U7G.
6A8G
6U7G.
6Q7G.
6G5/6H5
25Z6G
25L6G.
1937-38
MF. 445 kHz.
Instr. 1000 Ω p.V.
16M/50M
190M/600M
850M/2500M
P.U.
50
BELL 638 ≅