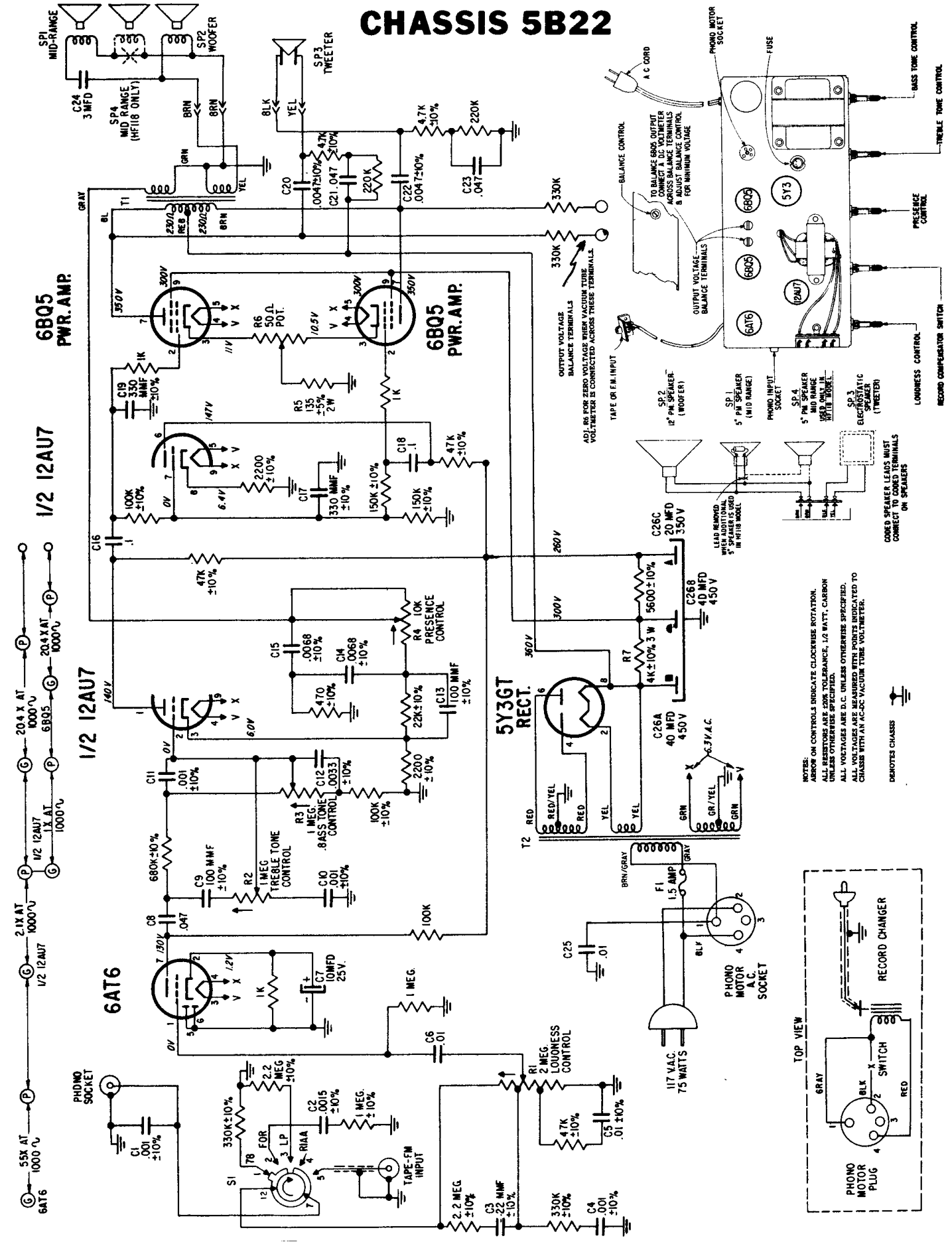ZENITH RADIO CORP. MODELS HF117 & HF118
CHASSIS 5B22