ZENITH RADIO CORPORATION
MODELS Z400, Z402 & Z404
CHASSIS 4Z40 & 4Z41

NOTES
ALL VOLTAGES MEASURED FROM COMMON RETURN TO POINTS INDICATED WITH AN A.C.-D.C OR VACUUM TUBE VOLTMETER
ALL VOLTAGES ARE D.C. UNLESS OTHERWISE SPECIFIED
ALL CONDENSERS ARE MICROFARADS UNLESS OTHERWISE SPECIFIED
ALL CONDENSERS ARE ±20% TOLERANCE UNLESS OTHERWISE SPECIFIED
ALL RESISTORS ARE ±20% TOLERANCE, 1/2 WATT, CARBON UNLESS OTHERWISE SPECIFIED.
USE ONLY ZENITH NON-INDUCTIVE ELECTROLYTIC CONDENSERS FOR REPLACEMENT

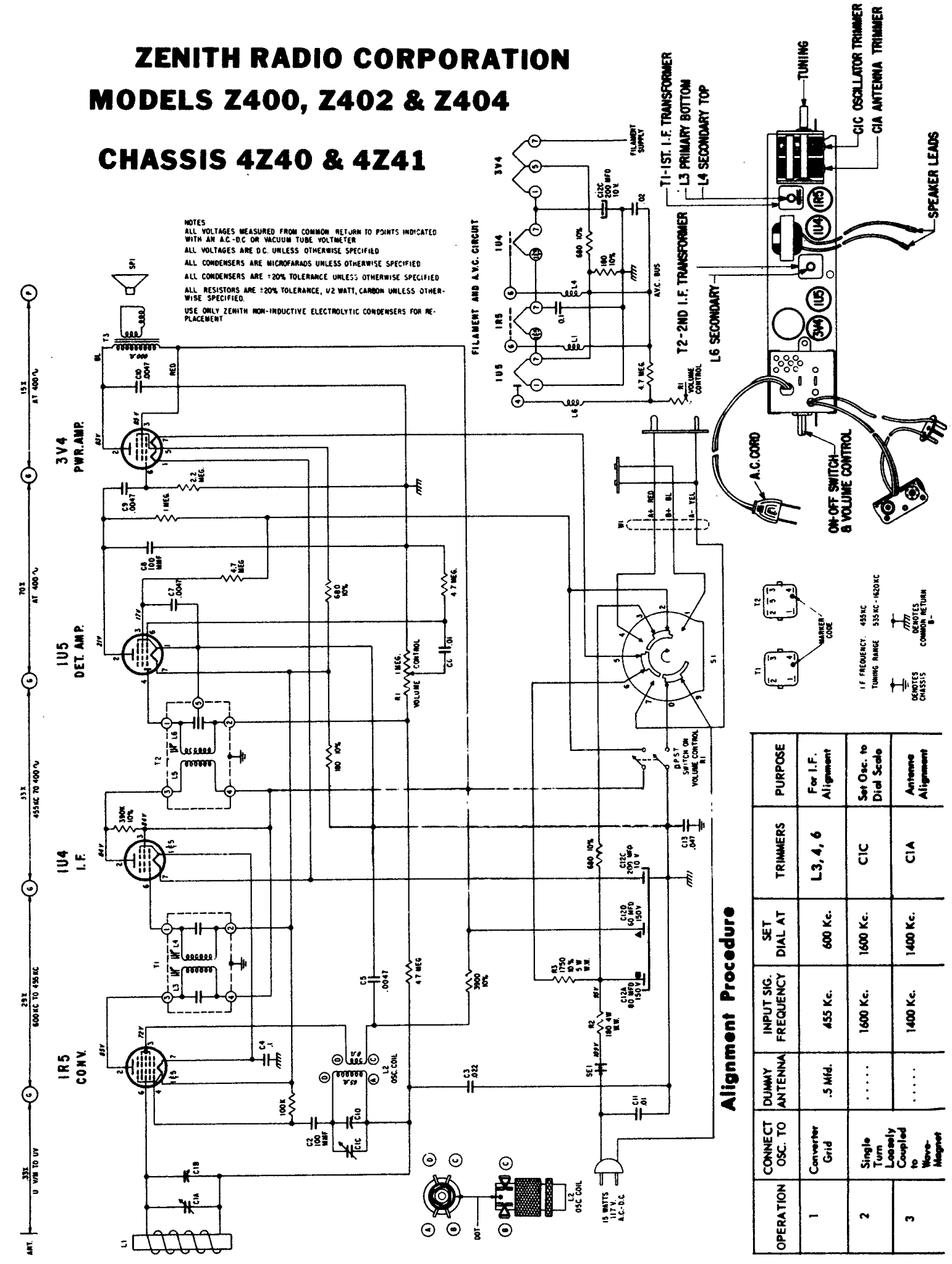

Alignment Procedure

OPERATION	CONNECT OSC. TO	DUMMY ANTENNA	INPUT SIG. FREQUENCY	SET DIAL AT	TRIMMERS	PURPOSE
1	Converter Grid	.5 Mfd.	455 Kc.	600 Kc.	L3, 4, 6	For I.F. Alignment
2	Single Turn Loosely Coupled to Wave-Magnet	.....	1600 Kc.	1600 Kc.	C1C	Set Osc. to Dial Scale
3		.....	1400 Kc.	1400 Kc.	C1A	Antenna Alignment