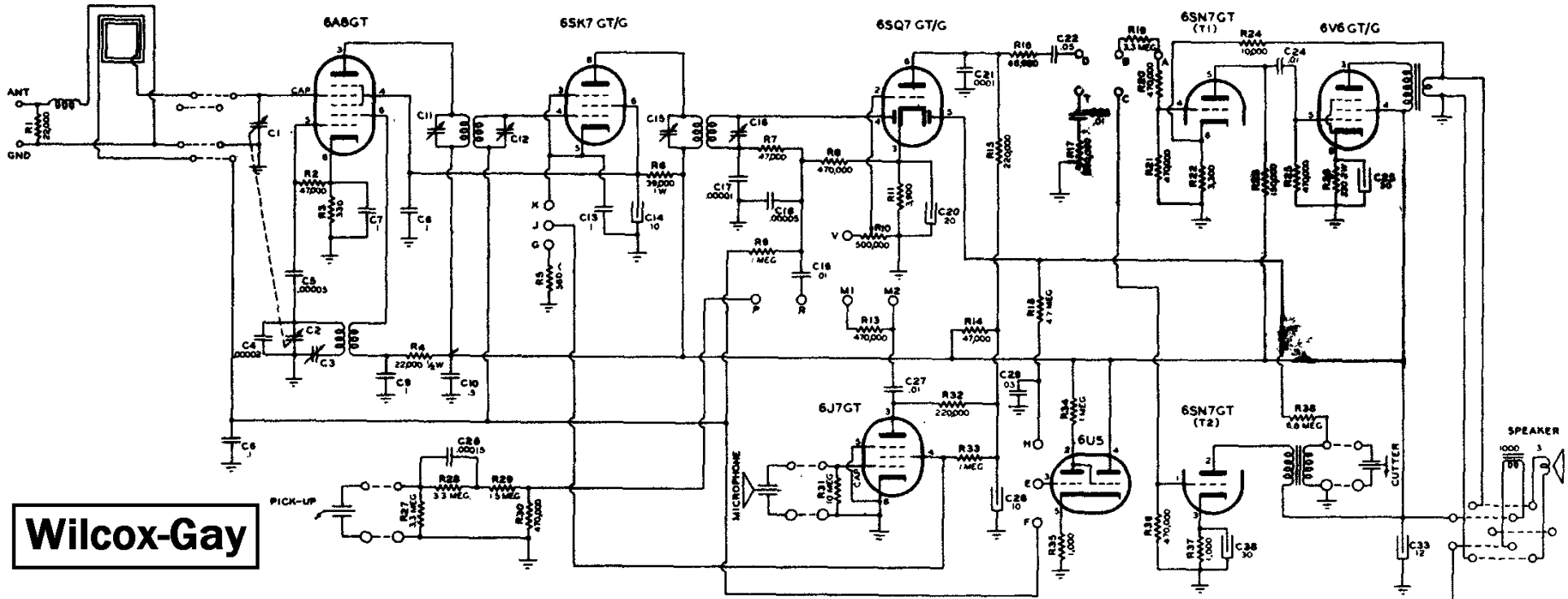

Wilcox-Gay

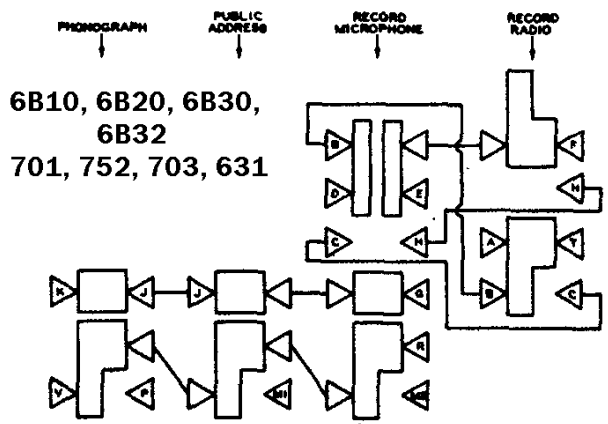

6B10, 6B20, 6B30, 6B32
701, 752, 703, 631

FUNCTION SWITCH - TERMINAL/PANEL SIDE
ALL PLUNGERS IN RELEASED POSITION.

TYPICAL VOLTAGE CHART

TUBE	VOLTAGE TO GROUND PIN NO. 1	2	3	4	5	6	7	8
6A8	0	0	240	80	-10	156	6.3 AC	2.5
6SK7	0	0	3.3		3.3	80	6.3 AC	240
6SN7	0	232	6.5	0	5.5	1.6	6.3 AC	0
6SQ7	0	0	1.5	0	0	58	6.3 AC	0
6V6	0	0	225	240	0	240	6.3 AC	13
6J7	0	0	80	3.3	0	180	3 AC	0
5Y3	0	320		305 AC		305 AC		320
6E5	0	6	0	240	1	6.3 AC		

MEASURED WITH 1000 OHMS PER VOLT METER.
SCALES USED -3-35-150-300
ALL PLUNGERS IN RELEASED POSITION.

FUNCTION	SWITCH CONTACTS CLOSED			
RADIO	K-J-G	V-R	D-B-A-T	E-F
RECORD RADIO	K-J-G	V-R	D-B-C	E-H
PHONOGRAPH	J-G	V-P	D-B-A-T	E-F
PUBLIC ADDRESS	K-J	V-M1	D-B-A-T	E-F
RECORD MICROPHONE	K-J	V-M2	D-C	E-H

An OUTPUT METER or other indication device should be used for accuracy in making ganging adjustments. If an output meter is not available, the tuning indicator may be used as an output indicator. Resonance of the circuits will be indicated by the maximum closing of the tuning eye.