ZENITH Chassis 3L03, Model LPS50

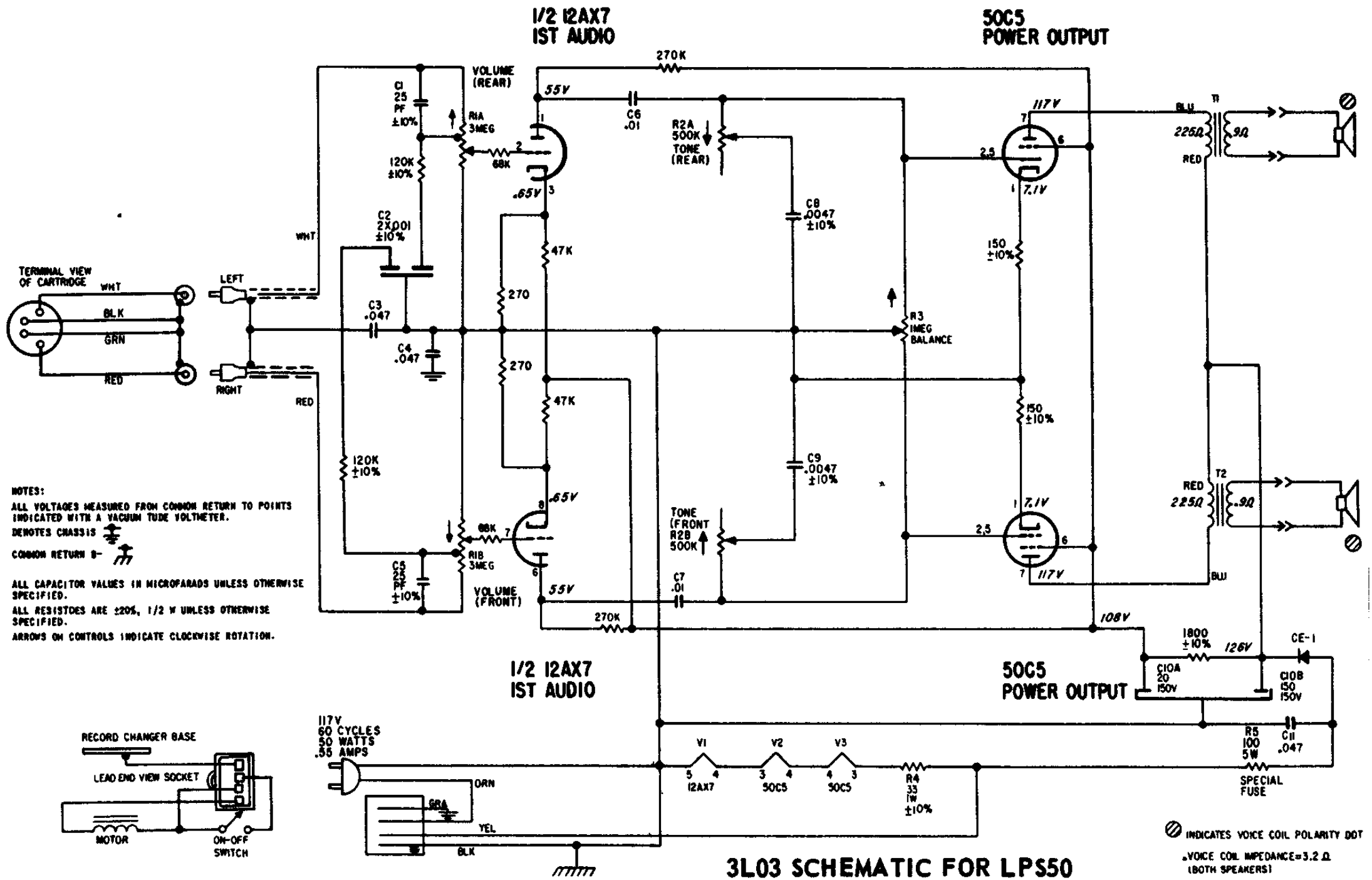

NOTES:

ALL VOLTAGES MEASURED FROM COMMON RETURN TO POINTS INDICATED WITH A VACUUM TUBE VOLTMETER.

DENOTES CHASSIS

COMMON RETURN B-

ALL CAPACITOR VALUES IN MICROFARADS UNLESS OTHERWISE SPECIFIED.

ALL RESISTORS ARE ±20%, 1/2 W UNLESS OTHERWISE SPECIFIED.

ARROWS ON CONTROLS INDICATE CLOCKWISE ROTATION.

3L03 SCHEMATIC FOR LPS50