ZENITH RADIO CORPORATION

CHASSIS 3Y02
MODELS HFY17R and HFY17E

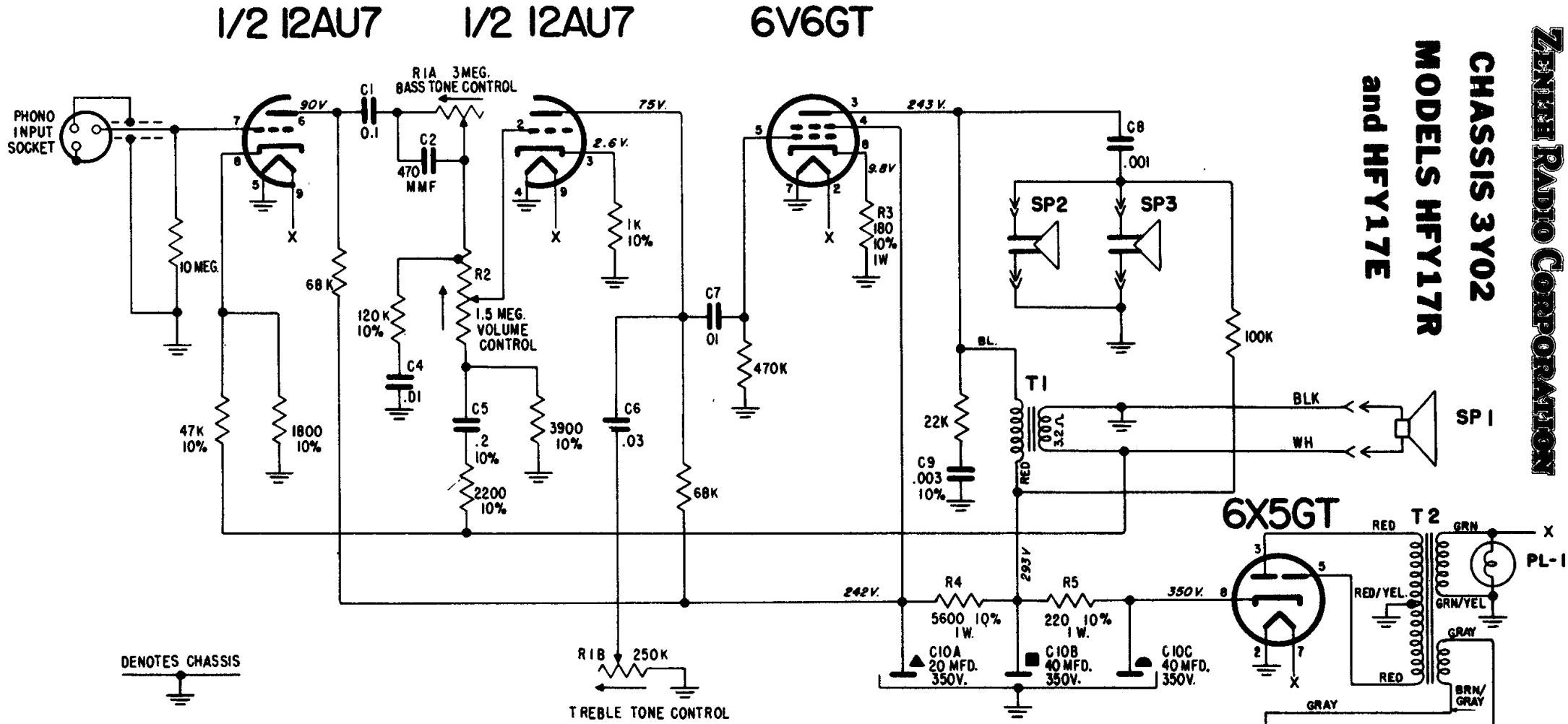

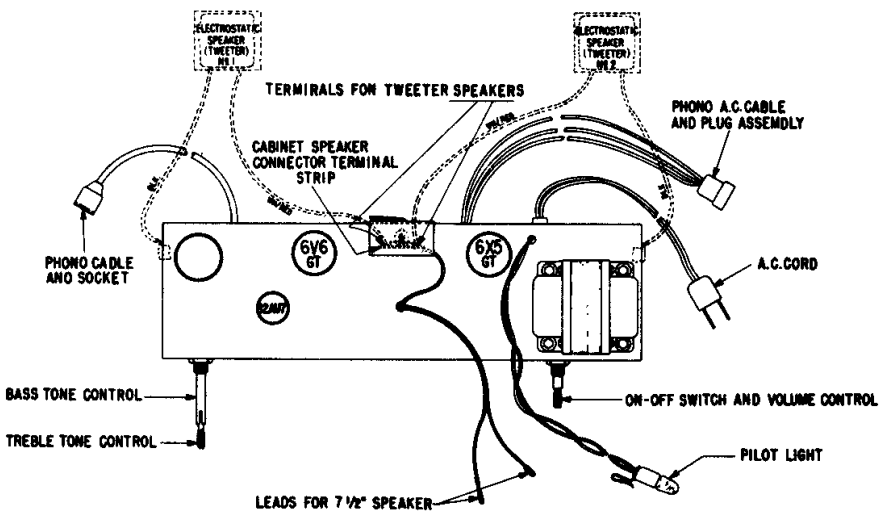

NOTES:

ARROW ON CONTROLS INDICATES CLOCKWISE ROTATION.

ALL RESISTORS ARE ± 20% TOLERANCE, 1/2 WATT CARBON UNLESS OTHERWISE SPECIFIED.

ALL VOLTAGES ARE D.C. UNLESS OTHERWISE SPECIFIED.

ALL VOLTAGES ARE MEASURED FROM POINTS INDICATED TO CHASSIS WITH AN A.C.– D.C. VACUUM TUBE VOLTMETER

ALL CAPACITORS ARE IN MICROFARADS UNLESS OTHERWISE SPECIFIED.

MODELS HFY17R and HFY17E CHASSIS 3Y02