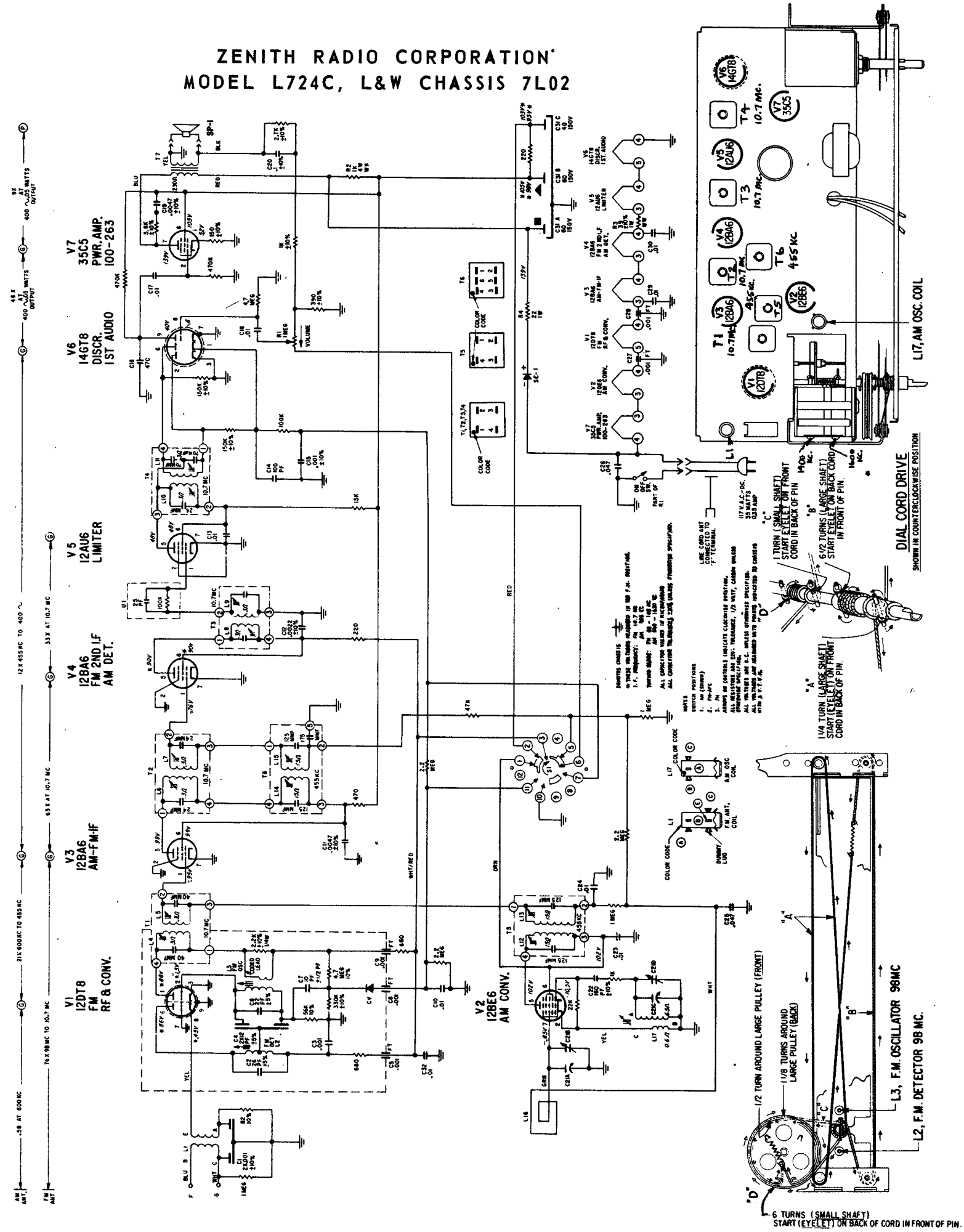ZENITH RADIO CORPORATION
MODEL L724C, L&W CHASSIS 7L02