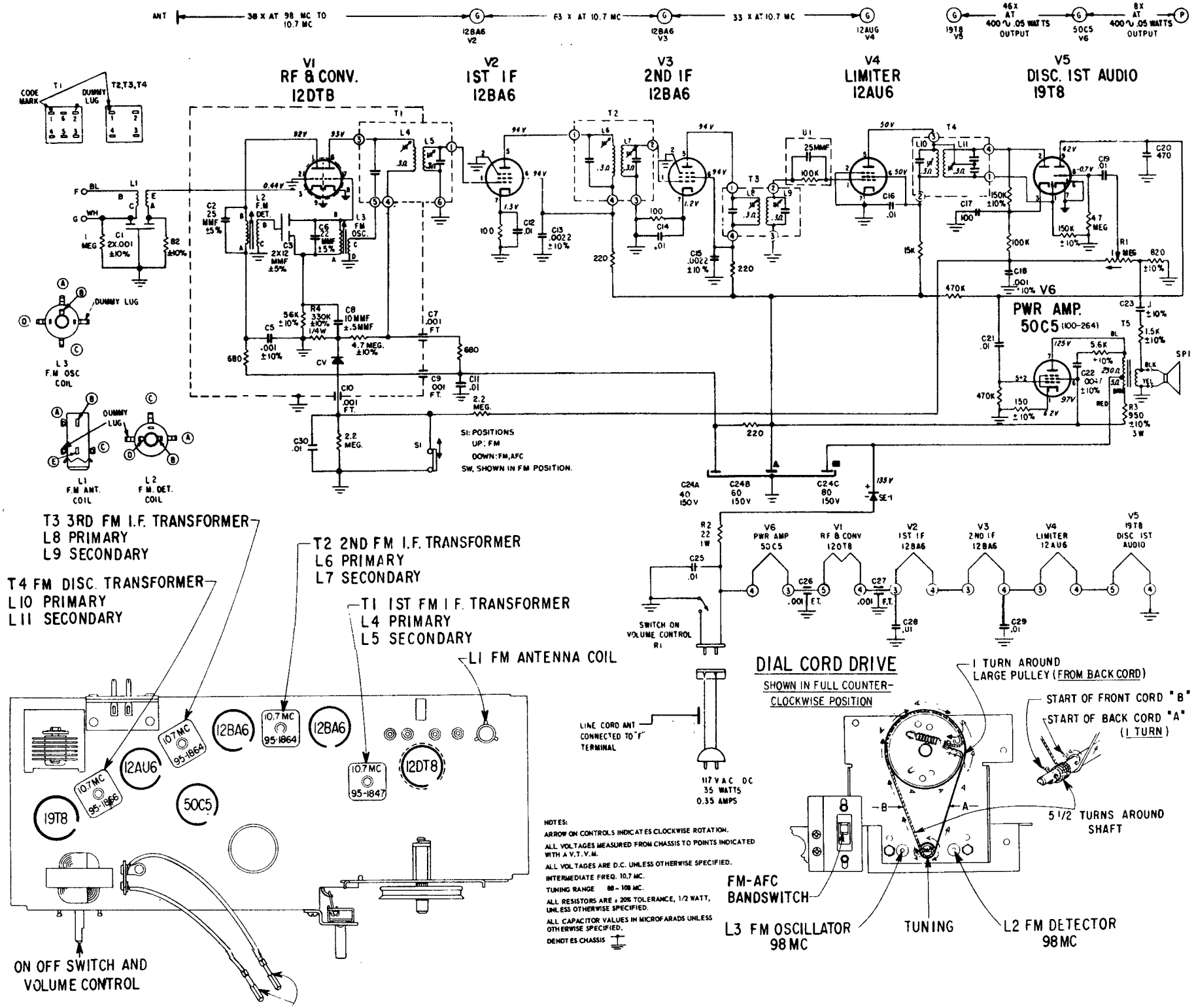ZENITH RADIO MODEL L722C, G&W CHASSIS 6L06