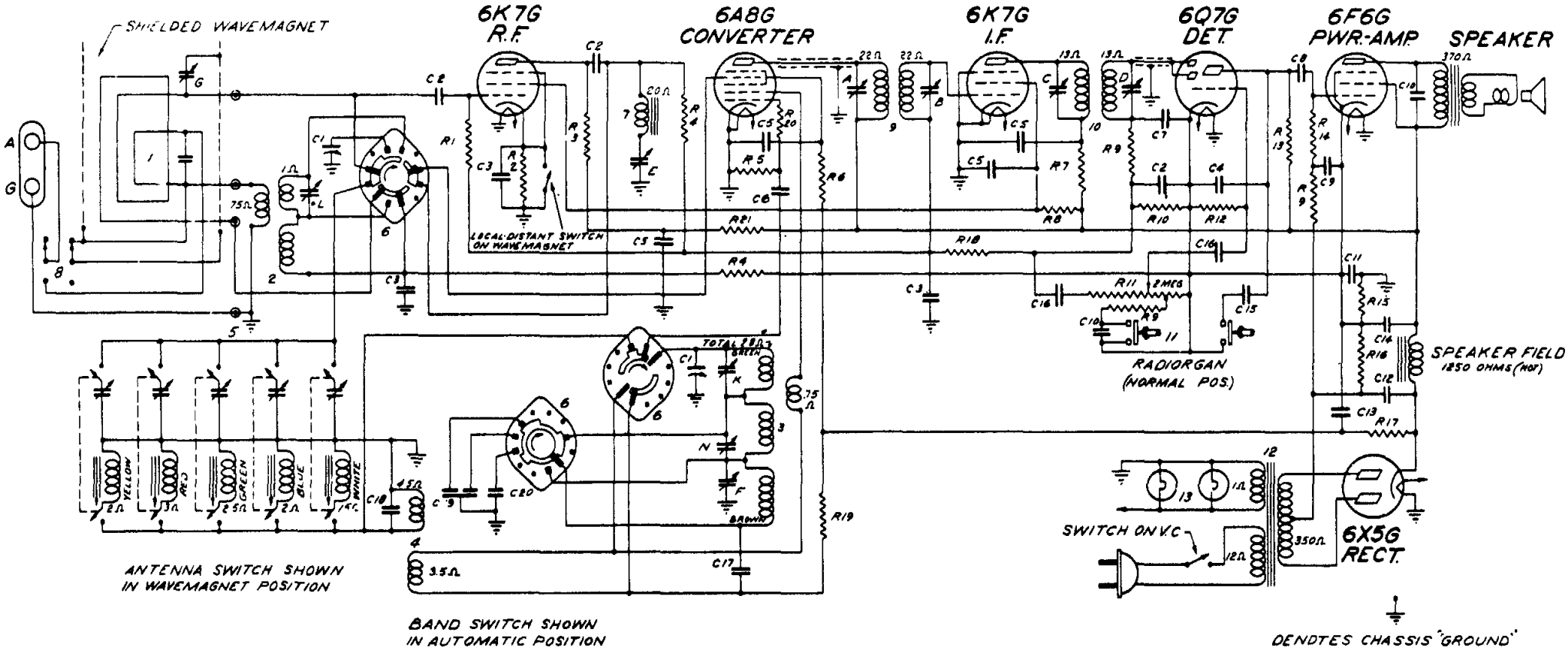

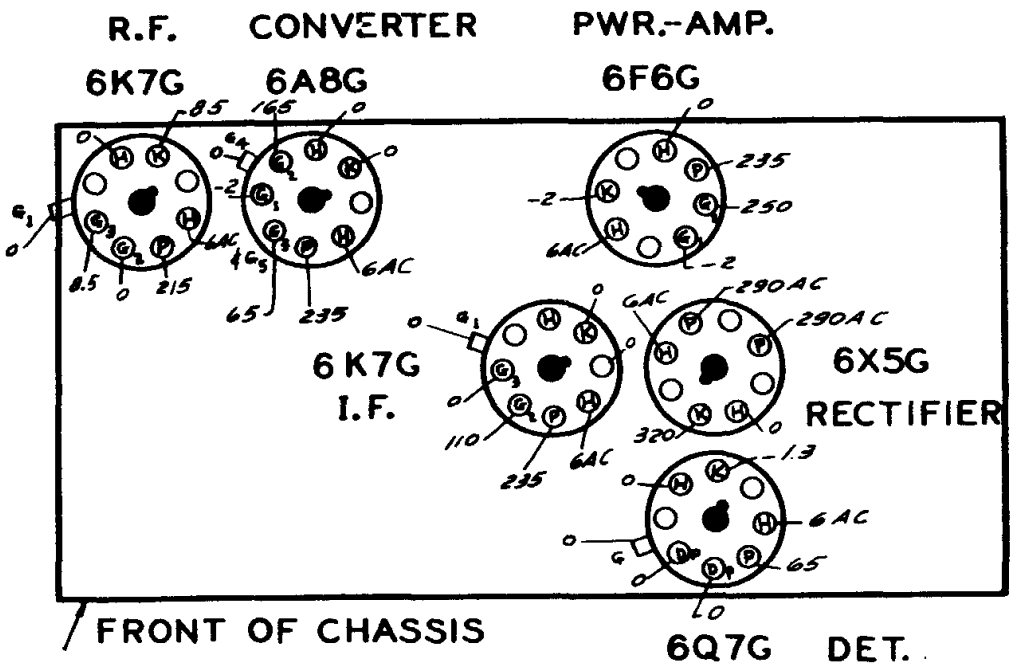

DIAG. Nº	PART Nº	DESCRIPTION		DIAG. Nº	PART Nº	DESCRIPTION		DIAG. Nº	PART Nº	DESCRIPTION	
C 1	22-849	2 GANG VARIABLE		C20	22-866	OSCILLATOR PADDER		R 16	63-1056	280 OHM WIREWOUND	1/2 W.
C 2	22-162	.0001 MFD	600V					R 17	63-151	15 M OHM	1 W.
C 3	22-829	.05 MFD	200V					R 18	63-599	1.5 MEGOHM	1/4 W.
C 4	22-716	.0005 MFD	600V					R 19	63-1054	10 M OHM	1/2 W.
C 5	22-828	.05 MFD	400V	R 1	63-271	1 MEGOHM	1/4 W.	R 20	63-739	100 OHM	1/4 W.
C 6	22-289	.50 MMFD	600V	R 2	63-588	6800 OHM	1/4 W.	R 21	63-585	2200 OHM	1/4 W.
C 7	22-192	.00025 MFD	600V	R 3	63-607	15 M OHM	1/2 W.				
C 8	22-830	.02 MFD	600V	R 4	63-595	100 M OHM	1/4 W.	1		WAVEMAGNET ASSEMBLY	
C 9	22-819	.03 MFD.	200V	R 5	63-592	33 M OHM	1/4 W.	2	57546	ANTENNA COIL ASSEMBLY	
C 10	22-229	.005 MFD	600V	R 6	63-381	100 M OHM	1/2 W.	3	56937	OSCILLATOR COIL ASSEMBLY	
C 11	22-827	.1 MFD.	200V	R 7	63-583	1000 OHM	1/4 W.	4	56992	OSC COUPLER COIL ASSEM	
C 12	22-975	20 MFD ELECTROLYTIC	450V	R 8	63-361	47 M OHM	1 W.	5	57044	AUTOMATIC TUNING ASSEM.	
C 13	22-976	10 MFD ELECTROLYTIC	450V	R 9	63-593	47 M OHM	1/4 W.	6	85-205	BAND SELECTOR SWITCH	
C 14		15 MFD ELECTROLYTIC	350V	R 10	63-659	470 M OHM	1/4 W.	7	57500	WAVE TRAP COIL ASSEMBLY	
C 15	22-449	.004 MFD	600V	R 11	63-1030	VOLUME CONTROL	1/2 W.	8	85-171	WAVEMAGNET SWITCH	
C 16	22-196	.01 MFD	600V	R 12	63-976	15 MEGOHM	1/4 W.	9	95-600	1ST I.F. TRANS.	
C 17	22-358	.002 MFD	600V	R 13	63-296	220 M OHM	1/4 W.	10	95-596	2ND I.F. TRANS	
C 18	22-868	COMPENSATING COND		R 14	63-597	470 M OHM	1/4 W.	11	56994	TONE CONTROL SW ASSEM	
C 19	22-853	DUAL OSC PADDER		R 15	63-1057	470 OHM WIREWOUND	1/2 W.	12	95-634	POWER TRANS 60~ 115V.	

NOTE

All voltages measured with a 1000 ohm per volt meter from chassis to socket contact indicated.

I.F. FREQUENCY 455 KC.
6 TUBE SUPERHETERODYNE
CHASSIS Nº 5678 3BAND
ZENITH RADIO CORPORATION

Models 6S439—6S469

Chassis No. 5678