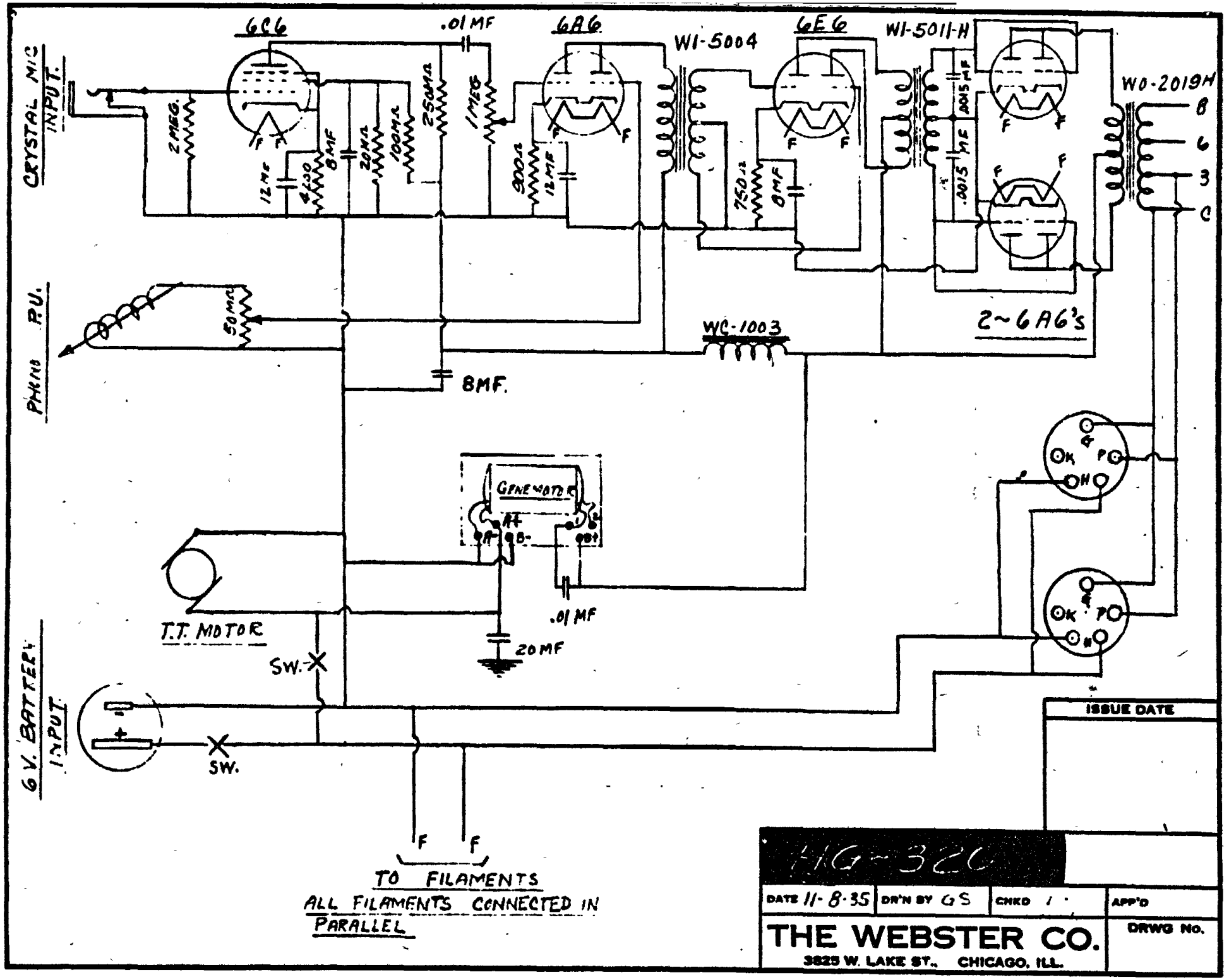

CRYSTAL MIC INPUT.
6C6
.01 MF
6A6
WI-5004
6E6
WI-5011-H
WO-2019H
2 MEG.
12 MF
4200
8 MF
20 MΩ
100 MΩ
250 MΩ
1 MEG
900 Ω
12 MF
750 Ω
8 MF
.0015 MF
.0015 MF
B
6
3
C
PHONO P.U.
50 MΩ
WC-1003
2~6A6's
8MF.
GENEMOTOR
A+
A-
B-
B+
.01 MF
20 MF
T.T. MOTOR
SW.
SW.
6 V. BATTERY INPUT
F
F
TO FILAMENTS
ALL FILAMENTS CONNECTED IN PARALLEL
ISSUE DATE
HG-326
DATE 11-8-35
DR'N BY GS
CHKD
APP'D
THE WEBSTER CO.
3825 W. LAKE ST., CHICAGO, ILL.
DRWG No.