WEBCOR Models 1953, 1991, using AM Tuner 73X014-1, Amplifiers 14X278-1, -2

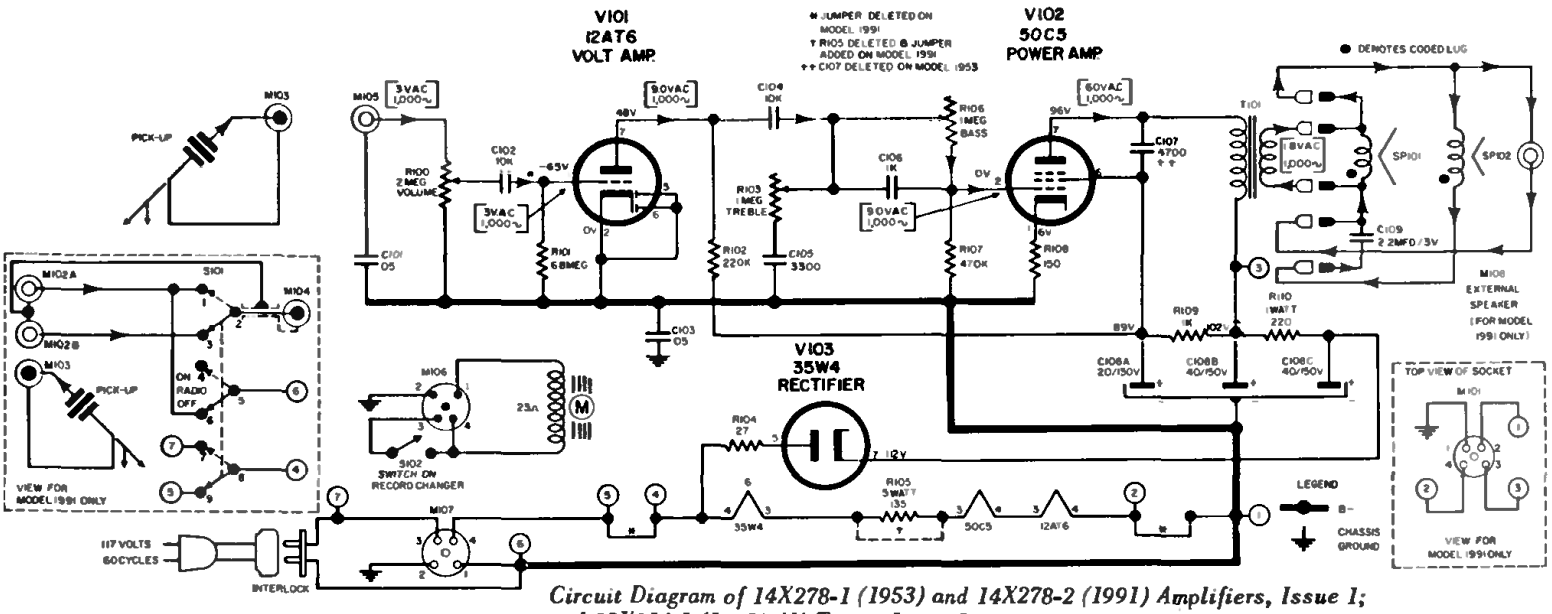

Circuit Diagram of 14X278-1 (1953) and 14X278-2 (1991) Amplifiers, Issue 1; and 73X014-1 (1991) AM Tuner, Issue 1.

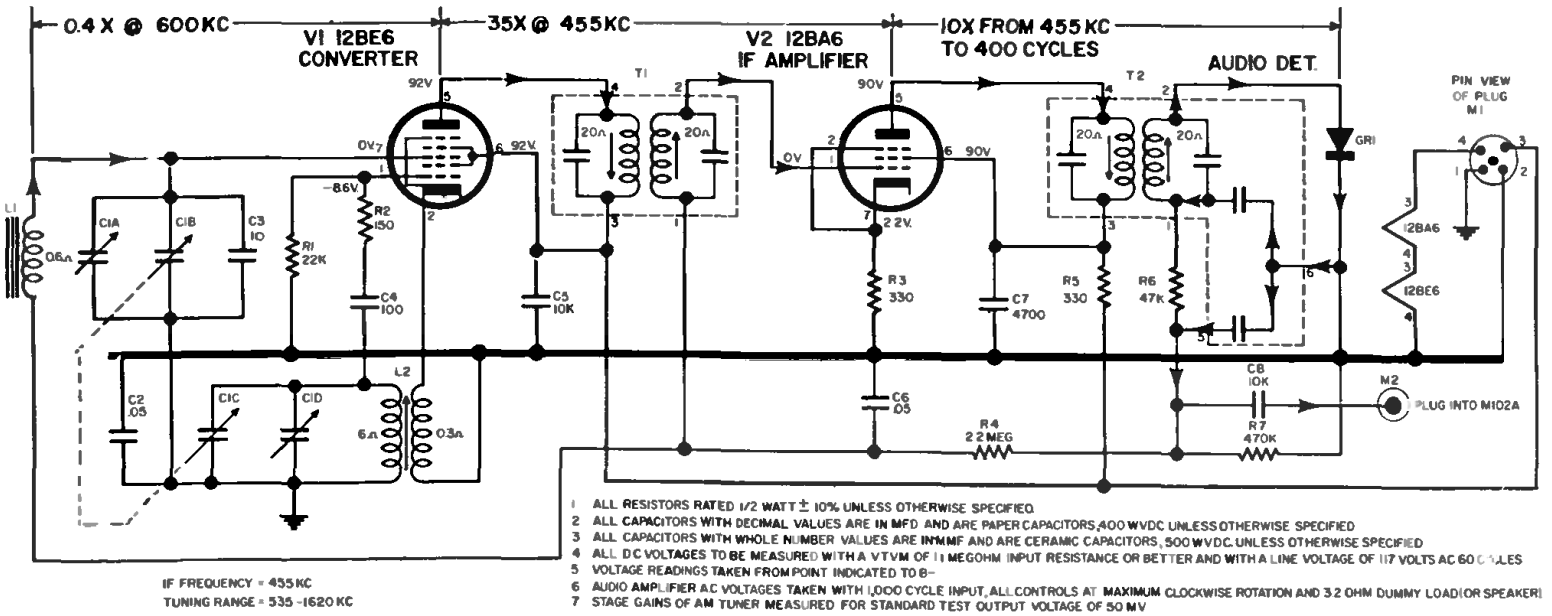

1. ALL RESISTORS RATED 1/2 WATT ± 10% UNLESS OTHERWISE SPECIFIED.
2. ALL CAPACITORS WITH DECIMAL VALUES ARE IN MFD AND ARE PAPER CAPACITORS, 400 WVDC UNLESS OTHERWISE SPECIFIED
3. ALL CAPACITORS WITH WHOLE NUMBER VALUES ARE IN MMF AND ARE CERAMIC CAPACITORS, 500 WVDC UNLESS OTHERWISE SPECIFIED
4. ALL DC VOLTAGES TO BE MEASURED WITH A VTVM OF 11 MEGOHM INPUT RESISTANCE OR BETTER AND WITH A LINE VOLTAGE OF 117 VOLTS AC 60 CYCLES
5. VOLTAGE READINGS TAKEN FROM POINT INDICATED TO B-
6. AUDIO AMPLIFIER A.C. VOLTAGES TAKEN WITH 1,000 CYCLE INPUT, ALL CONTROLS AT MAXIMUM CLOCKWISE ROTATION AND 3.2 OHM DUMMY LOAD (OR SPEAKER)
7. STAGE GAINS OF AM TUNER MEASURED FOR STANDARD TEST OUTPUT VOLTAGE OF 50 MV

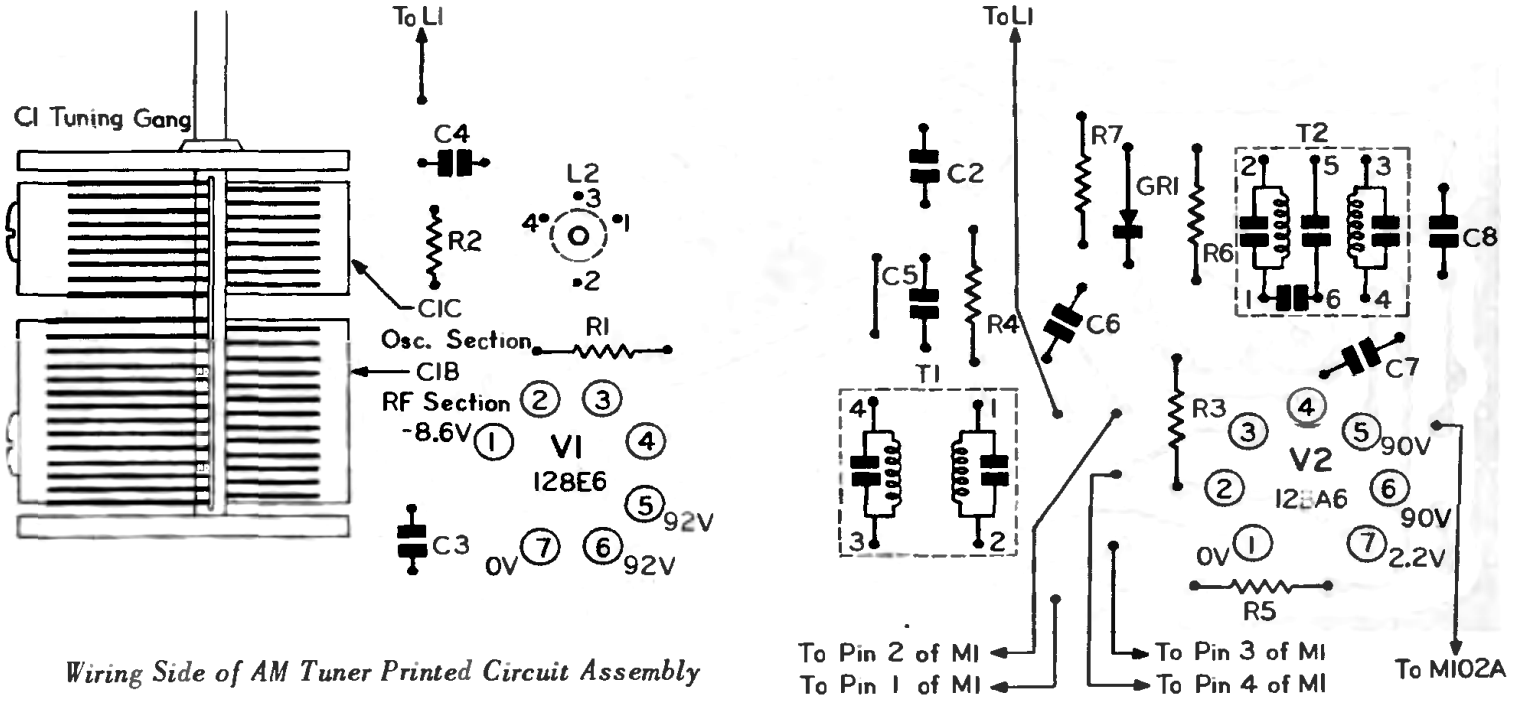

Wiring Side of AM Tuner Printed Circuit Assembly