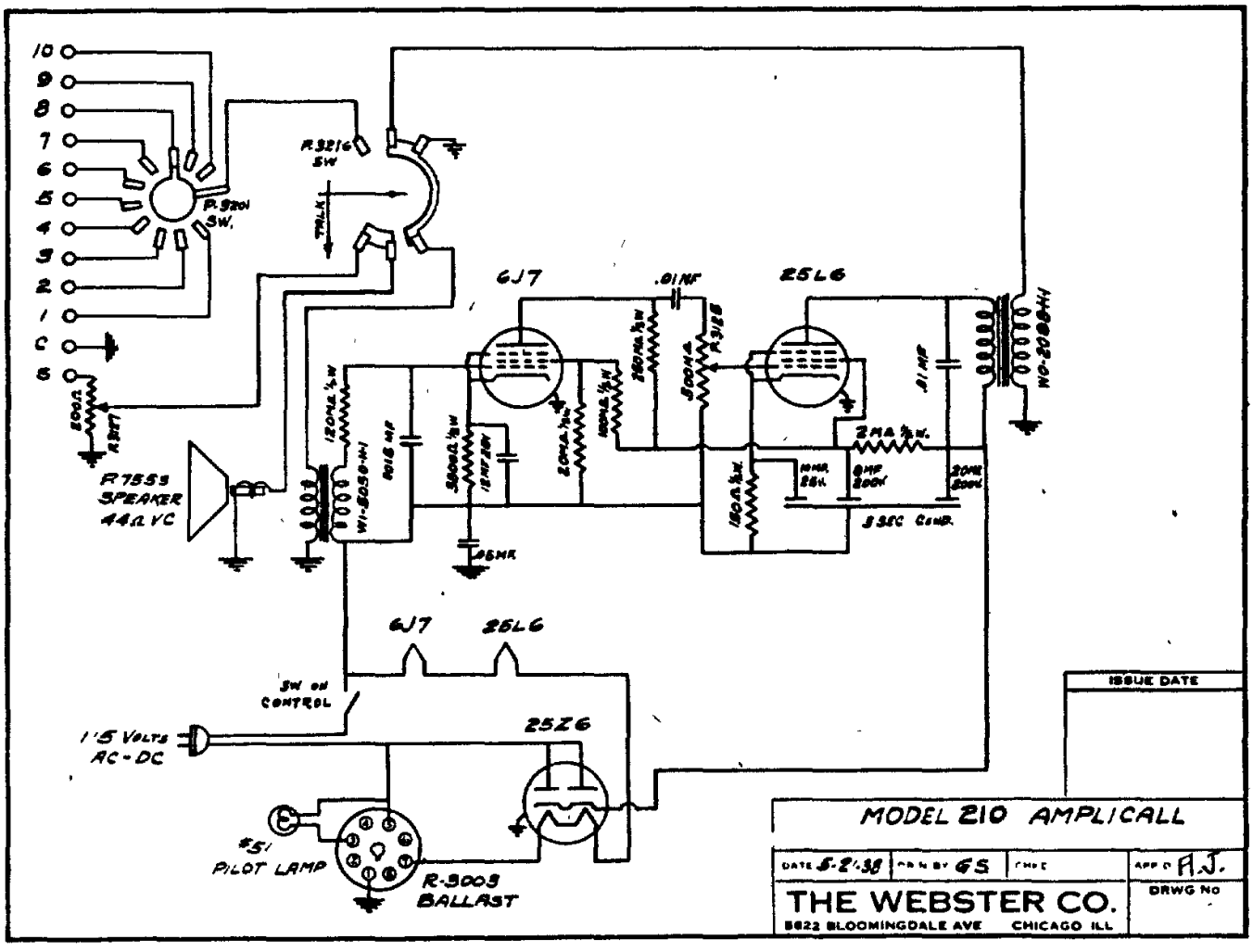

10
9
8
7
6
5
4
3
2
1
C
S
P.3201 SW.
P.3216 SW
TALK
6J7
.01MF
25L6
P.7553 SPEAKER 44Ω VC
WI-5050-H-1
WO-2098-H-1
3 SEC COND.
6J7
25L6
SW ON CONTROL
1'5 VOLTS AC-DC
25Z6
#51 PILOT LAMP
R-3003 BALLAST
ISSUE DATE
MODEL 210 AMPLICALL
DATE 5-21-38
DRN BY GS
CHKD
APP'D A.J.
THE WEBSTER CO.
5622 BLOOMINGDALE AVE CHICAGO ILL
DRWG NO

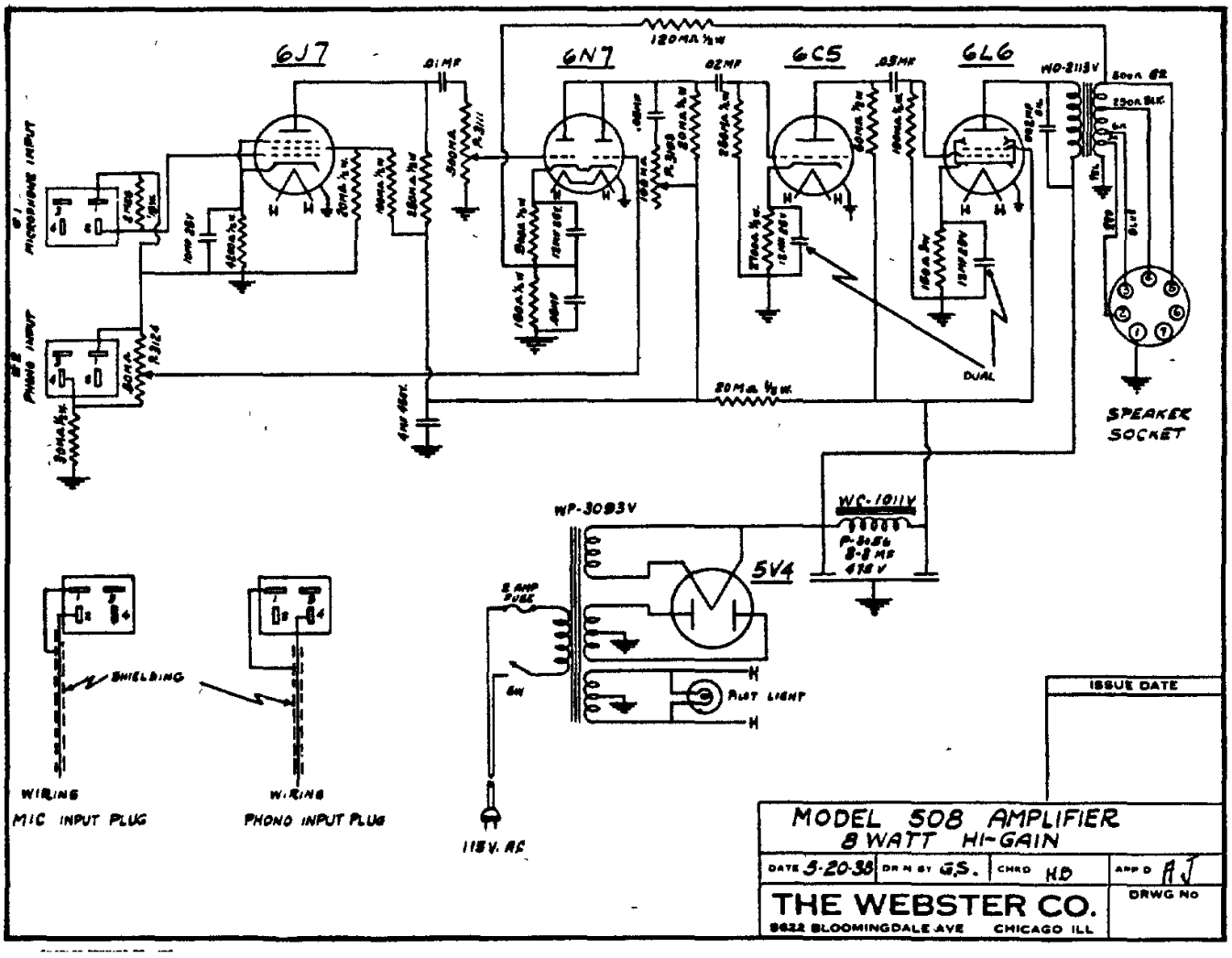

6J7
.01MF
6N7
.02MF
6C5
.03MF
6L6
120MΩ ½W
WO-2113V
#1 MICROPHONE INPUT
#2 PHONO INPUT
DUAL
20MΩ ½W.
SPEAKER SOCKET
WP-3093V
WC-1011V
5V4
2 AMP FUSE
PILOT LIGHT
SHIELDING
WIRING
MIC INPUT PLUG
WIRING
PHONO INPUT PLUG
115V. AC
ISSUE DATE
MODEL 508 AMPLIFIER
8 WATT HI-GAIN
DATE 5-20-38
DRN BY G.S.
CHKD HD
APP'D AJ
THE WEBSTER CO.
5622 BLOOMINGDALE AVE CHICAGO ILL
DRWG NO