Westinghouse CHASSIS ASSEMBLY V-2261-1

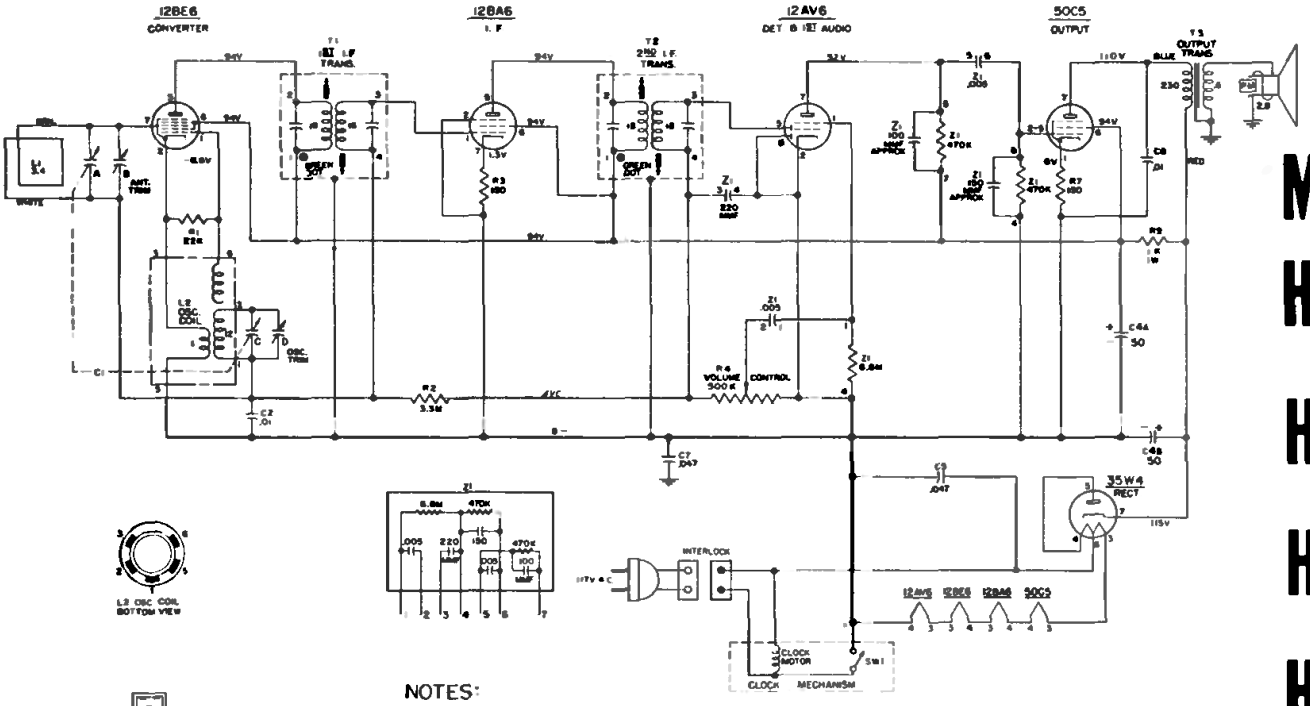

NOTES:

1. ALL VOLTAGES MEASURED FROM COMMON NEGATIVE USING A V.T.V.M. AND NO SIGNAL INPUT. LINE VOLTAGE SET AT 117V A.C. READINGS SHOULD BE AS SHOWN ±20 PER CENT
2. ALL CAPACITANCE VALUES IN MFD. AND ALL RESISTANCE VALUES IN OHMS UNLESS OTHERWISE SPECIFIED.

MODELS

H-547T5 *(Gray)*

H-548T5 *(Ivory)*

H-549T5 *(Green)*

H-550T5 *(Rose)*

ALIGNMENT

It is recommended that the chassis be isolated from the power line by means of an isolation transformer. While making the following adjustment, keep the volume control set for maximum output and the signal generator output antenuated as much as possible. Connect VTVM across voice coil.

Step	Connect Signal Generator To:	Signal Generator Frequency	Tuning Capacitor	VTVM Across Voice Coil and Adjust for Maximum Output
1	Stator of tuning capacitor (A) through a200 mmfd. capacitor.	455KC 400 Cycle 30% mod.	Minimum capacity	Top and bottom slugs of T2 and T1 in order given*
2.	Radiated signal	1625 KC	Minimum capacity	Oscillator trimmer (D)
3.	Radiated signal	1400 KC	1400KC	Antenna trimmer (B)

* It is recommended that a fiber aligning tool that snugly fits the slot in the powdered iron core be used to prevent chipping of the slot.

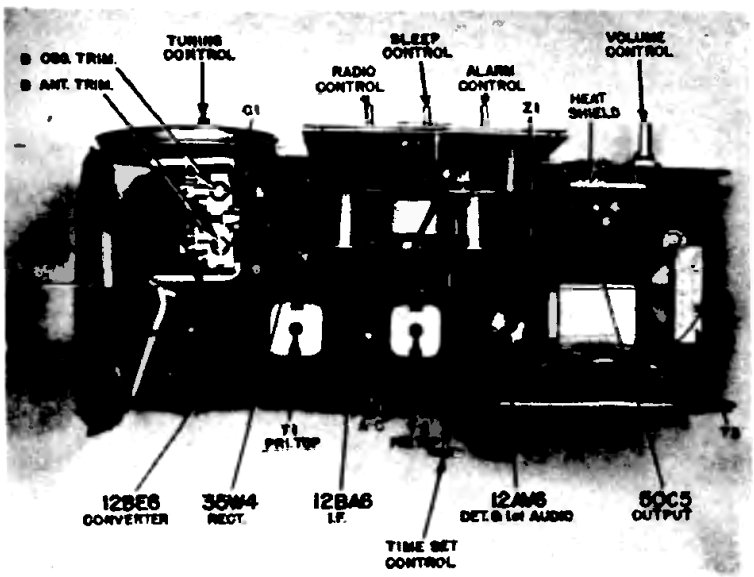

When extracting stubborn or troublesome components, the printed wiring may crack or break-off. Repairs can be made by soldering a small piece of tinned copper wire over the damaged or broken conductor (pig tail trimmings from capacitors and resistor, are ideal for this purpose).

CHASSIS REMOVAL
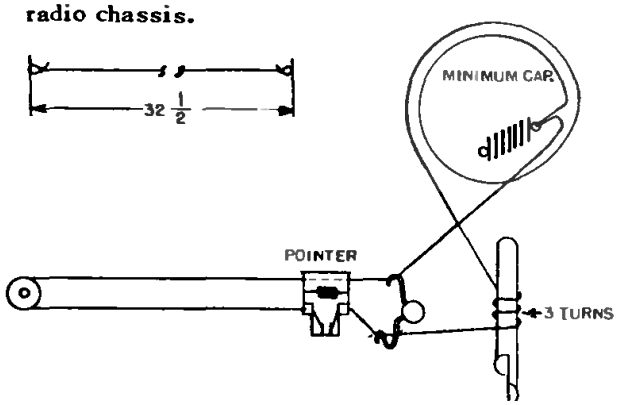
1. Remove the 3/4 inch self-tapping screw located at the bottom rear of the radio back cover.
2. Remove the two 4 1/4 inch phillip head bolts securing the back cover to the front rim and face assembly.
3. The chassis can now be removed for servicing. *Note;* To remove the front rim and face assembly, remove the (4) 1/4" self-tapping screws, two from the top bracket assembly and two from the radio chassis.