Westinghouse RADIO & TELEVISION

MODEL H-165

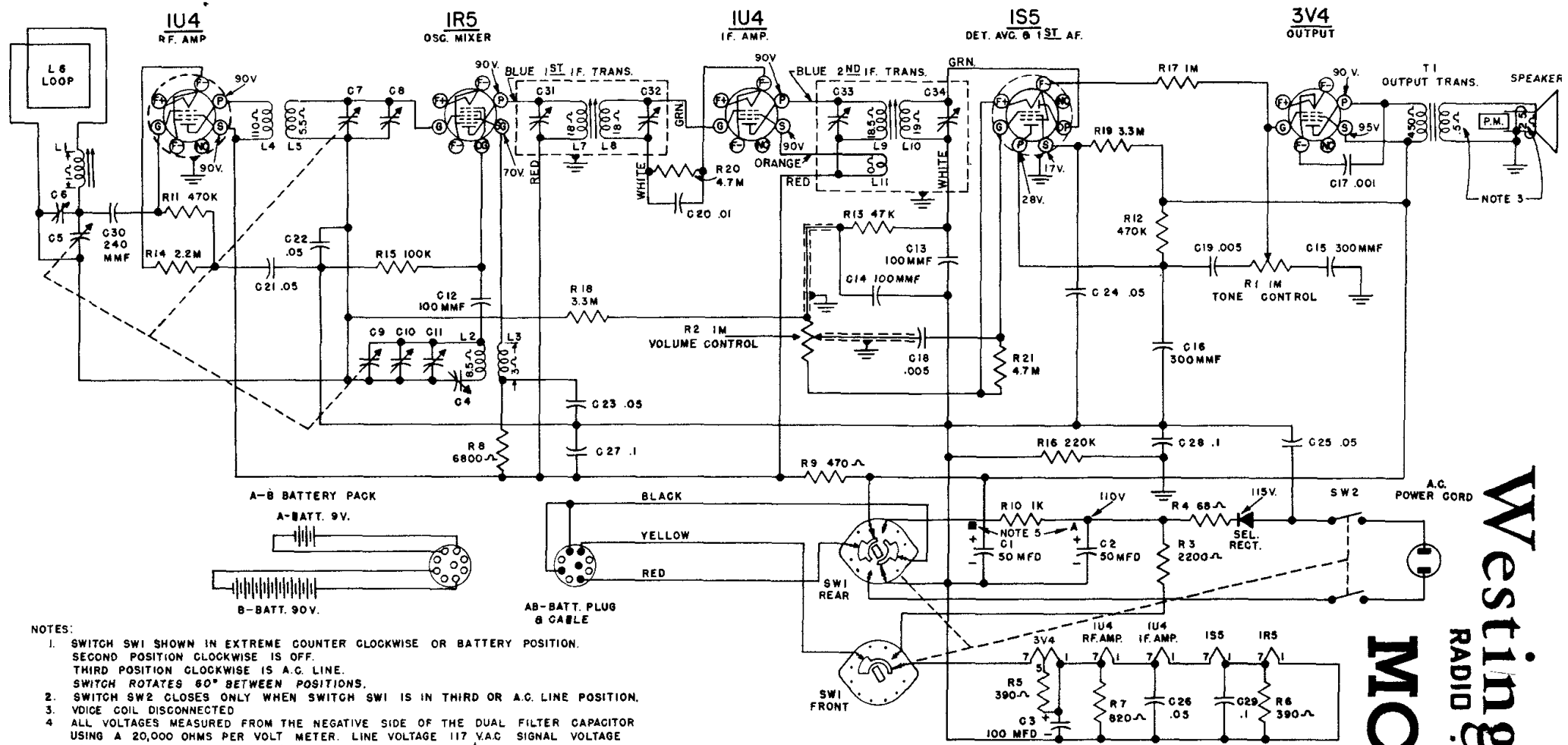

NOTES:

1. SWITCH SW1 SHOWN IN EXTREME COUNTER CLOCKWISE OR BATTERY POSITION. SECOND POSITION CLOCKWISE IS OFF. THIRD POSITION CLOCKWISE IS A.C. LINE. *SWITCH ROTATES 60° BETWEEN POSITIONS.*
2. SWITCH SW2 CLOSES ONLY WHEN SWITCH SW1 IS IN THIRD OR A.C. LINE POSITION.
3. VOICE COIL DISCONNECTED
4. ALL VOLTAGES MEASURED FROM THE NEGATIVE SIDE OF THE DUAL FILTER CAPACITOR USING A 20,000 OHMS PER VOLT METER. LINE VOLTAGE 117 V.A.C SIGNAL VOLTAGE ZERO. READINGS SHOULD APPROXIMATE THE VALUES SHOWN ± 20 PERCENT.
5. IN LATER PRODUCTION, THE POSITIONS OF C1 & C2 IN THE CIRCUIT WERE REVERSED.

INTERMEDIATE FREQUENCY .....455 kc

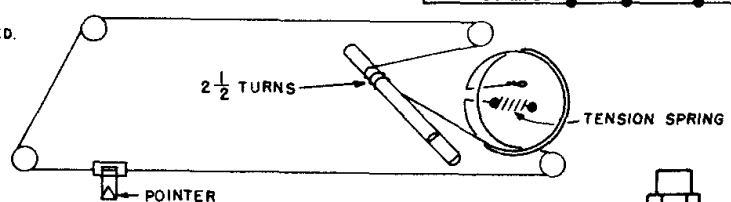

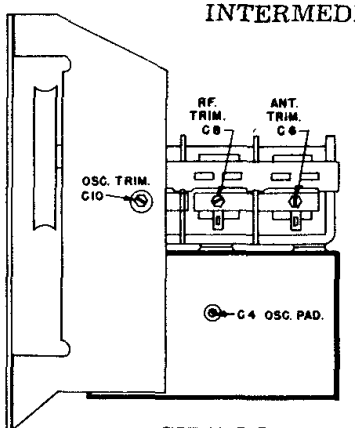
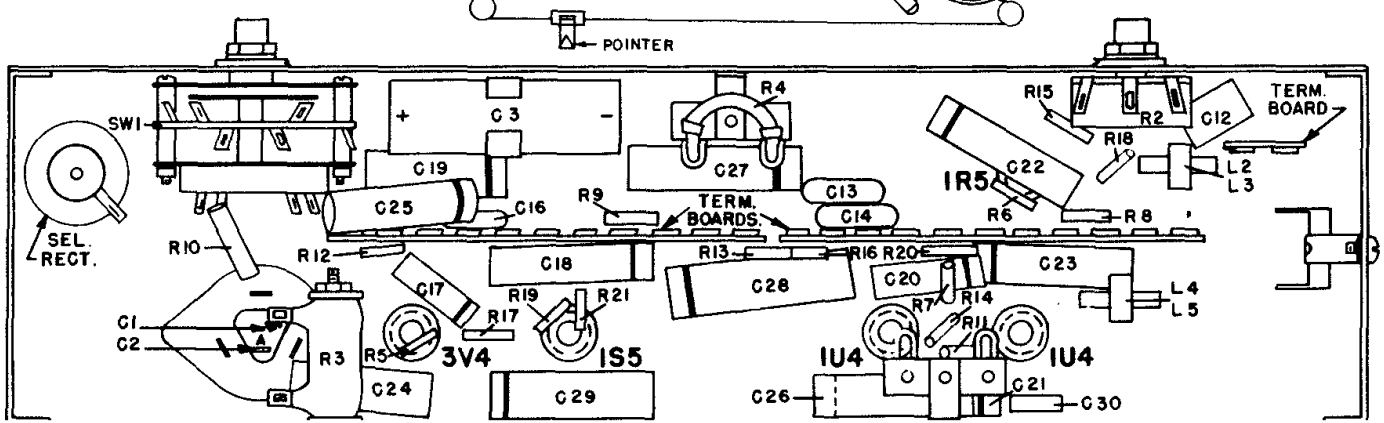
SIDE VIEW