WESTINGHOUSE Chassis V-2508-04

Models H-55ACS1, H-55ACS2

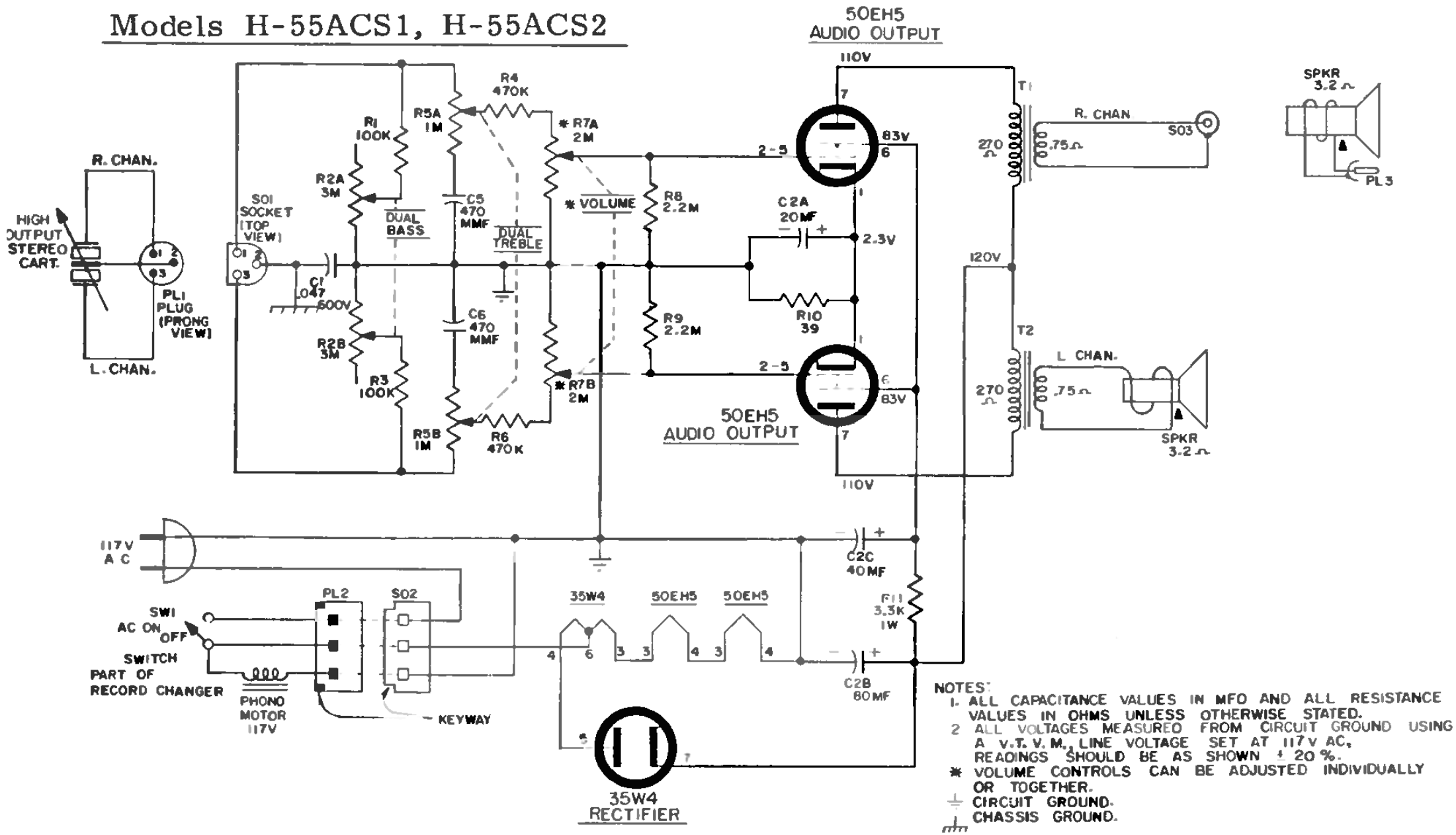

NOTES:

1. ALL CAPACITANCE VALUES IN MFD AND ALL RESISTANCE VALUES IN OHMS UNLESS OTHERWISE STATED.
2. ALL VOLTAGES MEASURED FROM CIRCUIT GROUND USING A V.T.V.M., LINE VOLTAGE SET AT 117V AC, READINGS SHOULD BE AS SHOWN ± 20%.

* VOLUME CONTROLS CAN BE ADJUSTED INDIVIDUALLY OR TOGETHER.

⏚ CIRCUIT GROUND.

⏚ CHASSIS GROUND.

3. REAR SECTIONS OF ALL CONTROLS ARE RIGHT CHANNEL.