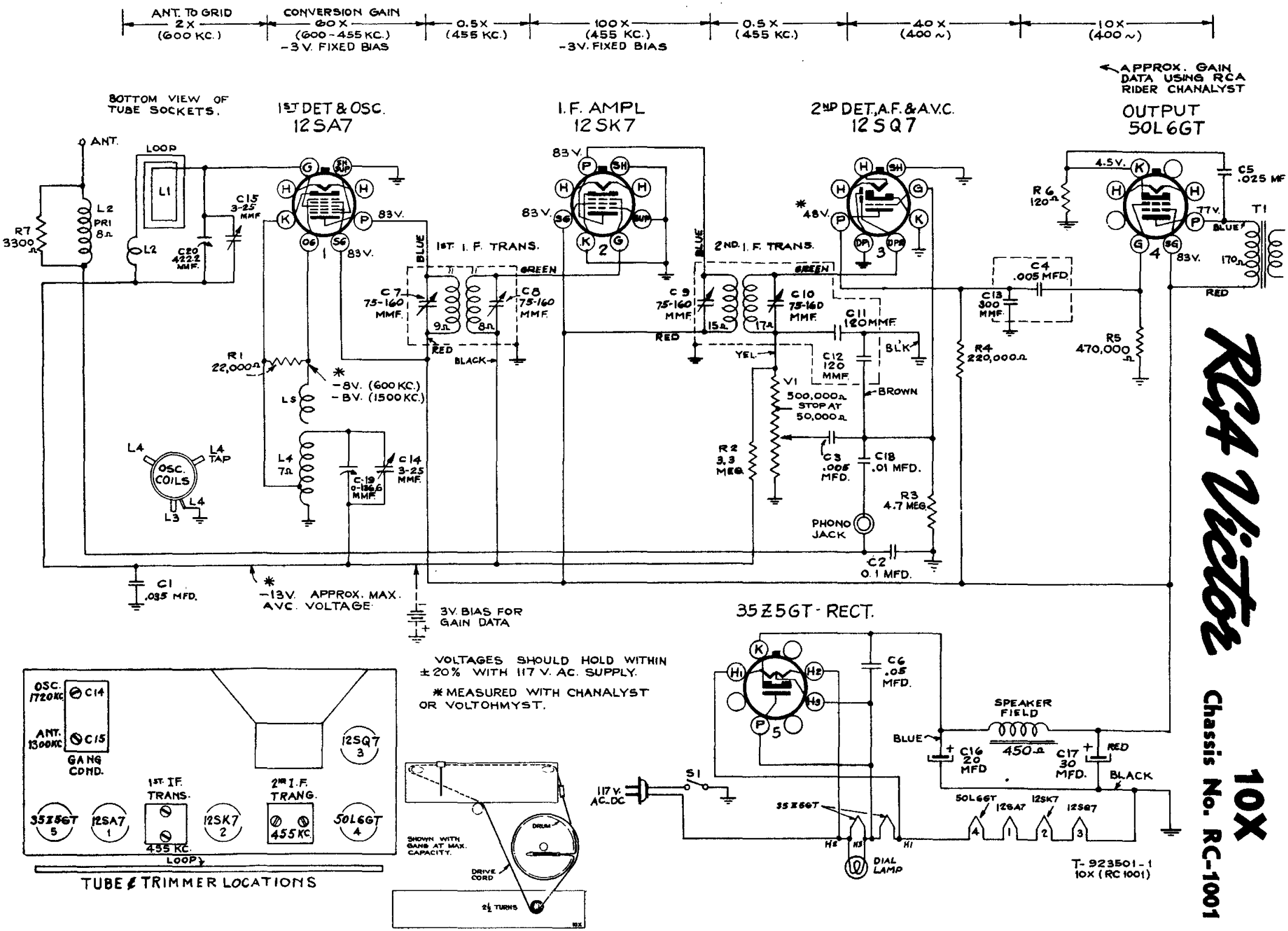
ANT. TO GRID 2X (600 KC.)
CONVERSION GAIN 60X (600-455 KC.) -3V. FIXED BIAS
0.5X (455 KC.)
100X (455 KC.) -3V. FIXED BIAS
0.5X (455 KC.)
40X (400 ~)
10X (400 ~)
APPROX. GAIN DATA USING RCA RIDER CHANALYST
BOTTOM VIEW OF TUBE SOCKETS.
1ST DET & OSC. 12SA7
I.F. AMPL 12SK7
2ND DET., A.F. & A.V.C. 12SQ7
OUTPUT 50L6GT
ANT.
LOOP
L1
L2
R7 3300Ω
L2 PRI 8Ω
C15 3-25 MMF
C20 422.2 MMF.
83V.
1ST I.F. TRANS.
2ND I.F. TRANS.
C7 75-160 MMF.
C8 75-160 MMF.
C9 75-160 MMF.
C10 75-160 MMF.
C11 120 MMF.
C12 120 MMF.
C13 300 MMF.
C4 .005 MFD.
C5 .025 MF
R6 120Ω
4.5V.
77V.
T1
170Ω
BLUE
GREEN
RED
BLACK
YEL.
BROWN
BL'K
R1 22,000Ω
-8V. (600 KC.)
-8V. (1500 KC.)
LS
L4 7Ω
C14 3-25 MMF.
C-19 0-136.6 MMF.
OSC. COILS
L4 TAP
L3
V1 500,000Ω STOP AT 50,000Ω
R2 3.3 MEG.
C3 .005 MFD.
C18 .01 MFD.
R3 4.7 MEG.
PHONO JACK
C2 0.1 MFD.
R4 220,000Ω
R5 470,000Ω
C1 .035 MFD.
-13V. APPROX. MAX. AVC. VOLTAGE
3V. BIAS FOR GAIN DATA
35Z5GT - RECT.
C6 .05 MFD.
SPEAKER FIELD 450Ω
C16 20 MFD
C17 30 MFD.
117 V. AC-DC
S1
35Z5GT
DIAL LAMP
50L6GT
12SA7
12SK7
12SQ7
T-923501-1 10X (RC 1001)
VOLTAGES SHOULD HOLD WITHIN ±20% WITH 117 V. AC. SUPPLY.
* MEASURED WITH CHANALYST OR VOLTOHMYST.
OSC. 1720KC C14
ANT. 1300KC C15
GANG COND.
12SQ7 3
1ST I.F. TRANS. 455 KC.
2ND I.F. TRANG. 455 KC.
35Z5GT 5
12SA7 1
12SK7 2
50L6GT 4
LOOP
TUBE & TRIMMER LOCATIONS
SHOWN WITH GANG AT MAX. CAPACITY.
DRUM
DRIVE CORD
2½ TURNS
RCA Victor
10X
Chassis No. RC-1001