MODELS 9-ES-5H, 9-ES-5JE
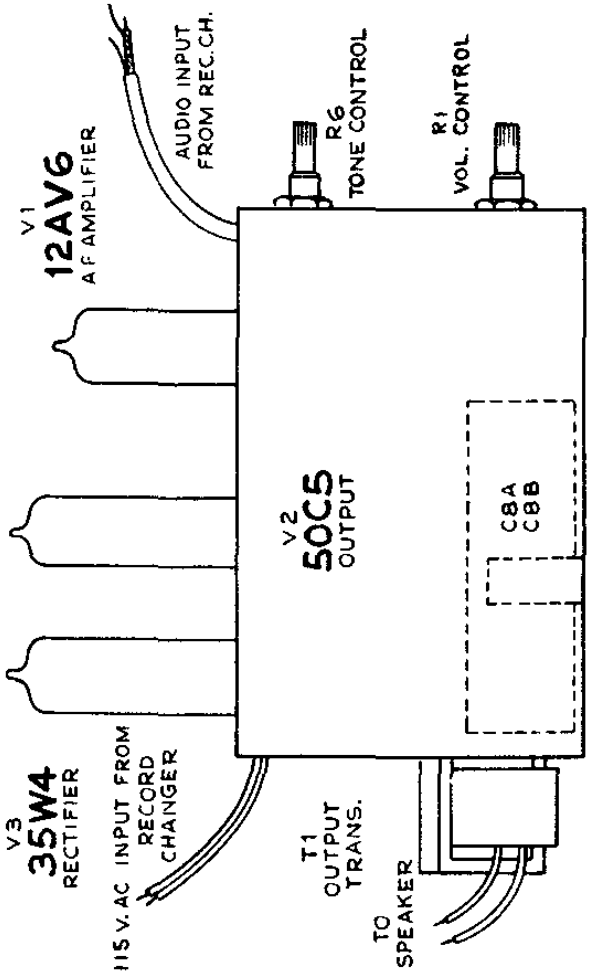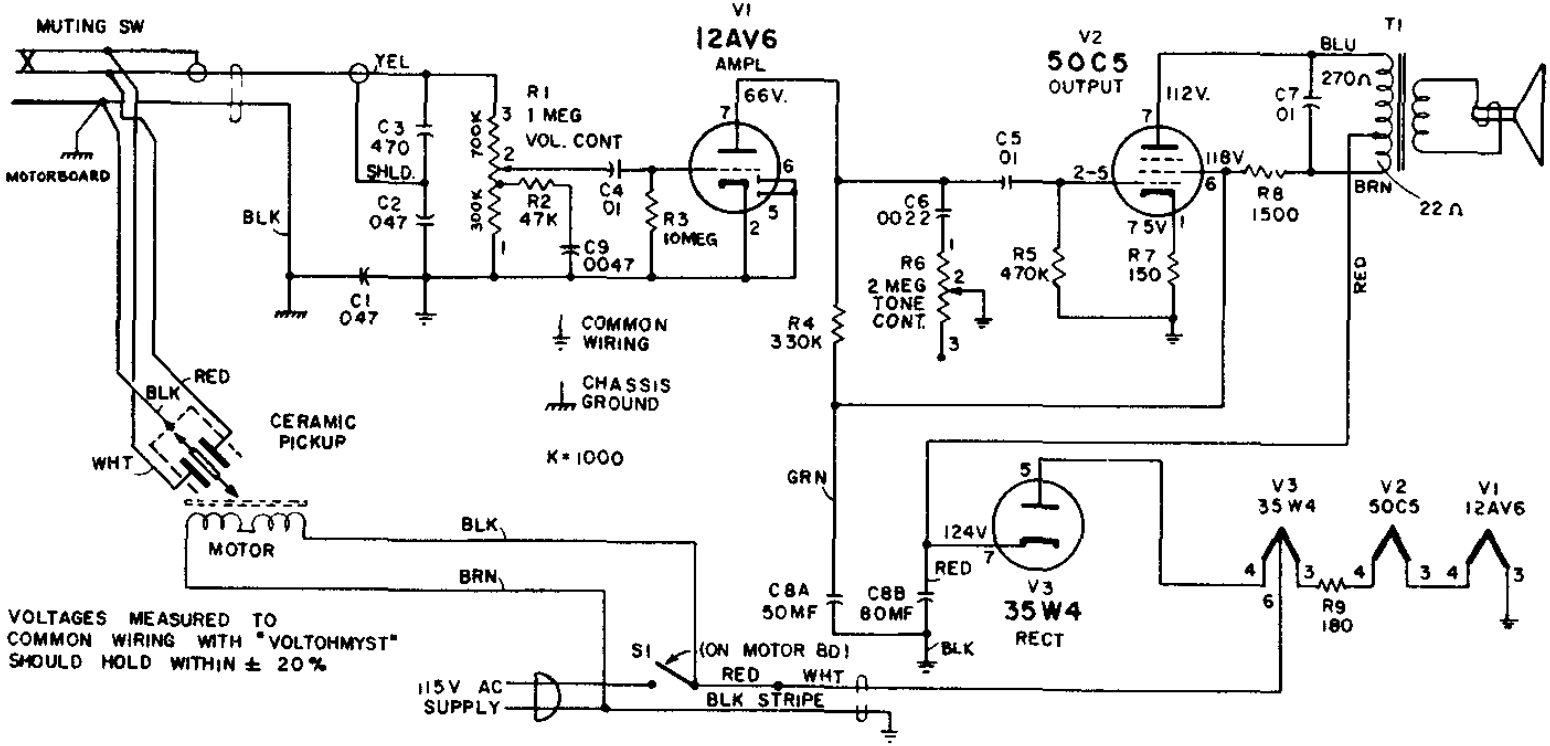
Chassis No. RS-170B