RCA VICTOR

55F and CV-42 Electrifier

Chassis No. RC-1004E; Mfr. No. 274

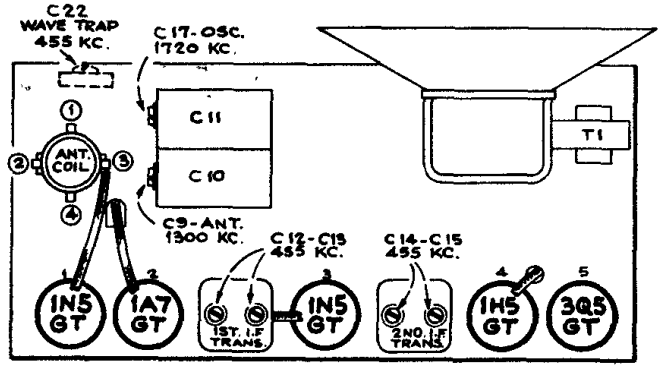

Alignment Procedure

Cathode Ray Alignment is the preferable method. Connections for the oscillograph are shown in the diagram.

Output Meter Alignment.—If this method is used, connect the meter across the voice coil and turn the receiver volume control to maximum.

Test Oscillator.—For all alignment operations, connect the low side of the test oscillator to the receiver chassis, and keep the output as low as possible to avoid AVC action.

Pre-Setting Dial.—With gang condenser in full mesh, the pointer should be set at the left-hand end dial calibration mark.

Step	Connect high side of the test oscillator to—	Tune test osc. to—	Turn radio dial to—	Adjust the following for maximum peak output
1	I-F grid in series with .01 mfd.	455 kc	Quiet point between 550 and 750 kc	C14, C15. (2nd I-F Trans.)
2	1A7GT grid in series with .01 mfd.			C12, C13 (1st I-F Trans.)
3	Antenna terminal in series with 200 mmfd.	1,720 kc	Tuning condenser rotor plates all out	C17 (osc.)
4		1,300 kc	1,300 kc signal	C9 (ant.)
5		455 kc	Quiet point between 550 and 750 kc	Adjust C22 for minimum output on strong 455 kc signal

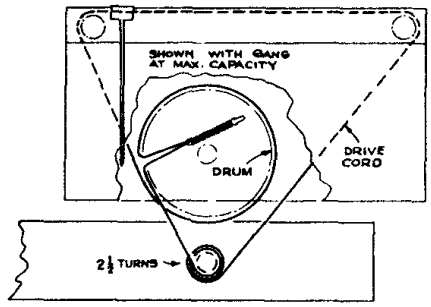

Dial Cord Assembly

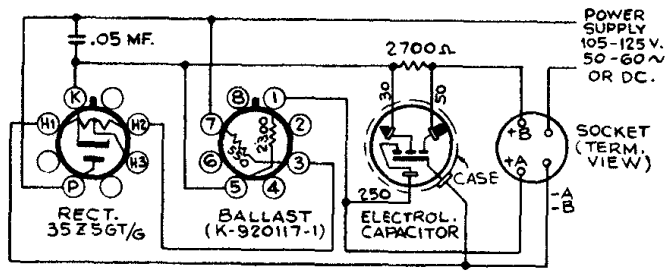
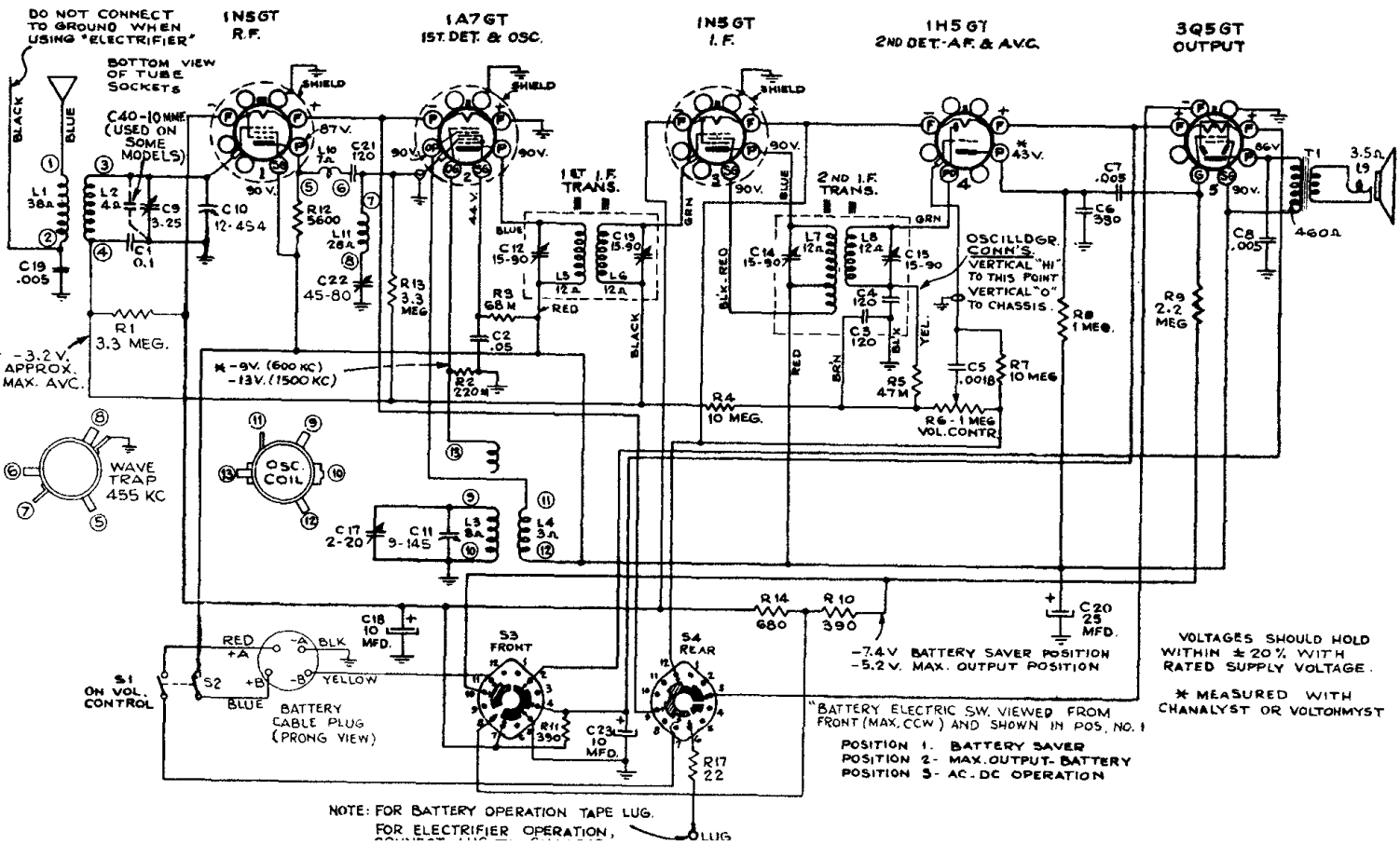
Electrifier Schematic