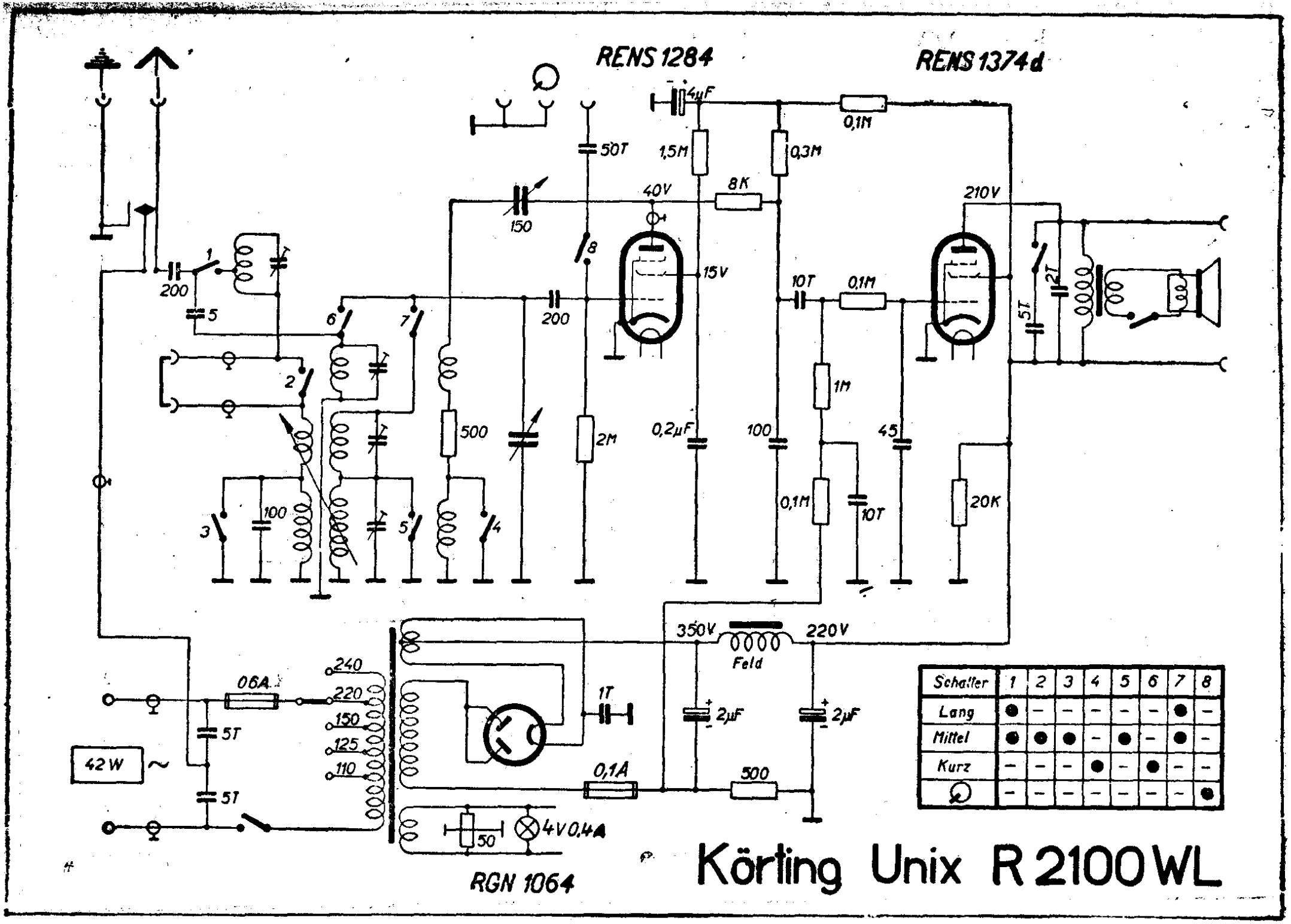

Schalter	1	2	3	4	5	6	7	8
Lang	●	–	–	–	–	–	●	–
Mittel	●	●	●	–	●	–	●	–
Kurz	–	–	–	●	–	●	–	–
⌕	–	–	–	–	–	–	–	●

Körting Unix R 2100 WL