RCA VICTOR

MODEL 66E

Victrola

Chassis No. RS-126

VIBRATION OF LID HOLD

A small piece of spring material is fastened on the inside of the cabinet in such a position as to apply force against the lid hold and keep it from vibrating when the lid is closed.

When servicing the instrument, make certain this spring is in position and serving its purpose.

Removal of Speaker and Jewel Pilot Light

The bottom front and the inside sloped panels are removable, making it convenient for removal of speaker and jewel pilot light.

CRITICAL LEAD DRESS

1. All leads and parts connected to the 6J5 socket should have sufficient slack to insure flexibility of socket.
2. The green lead from the center terminal of R10 volume control to terminal #2 of the 6SQ7 socket should be dressed up and away from all other leads and parts.

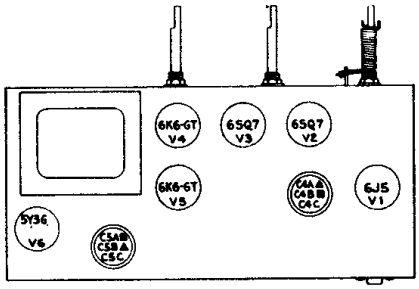

ADJUSTMENT OF VOLUME CONTROL LOCK

This instrument is provided with a Volume Control Lock, which can be adjusted in such a manner that will permit the control to be operated from zero to some pre-determined "Maximum" level to which it has been locked.

1. While instrument is in operation, remove Volume control knob.
2. The ends of two different weight springs can be seen in the Volume control shaft opening in the cabinet.
3. Turn Control "Maximum" clockwise until it is against stop.
4. To INCREASE desired maximum Volume level—
   (a) Apply just enough force (to unlock volume control shaft) with the eraser end of a pencil, on the end of the light weight spring, in direction indicated in sketch "B"

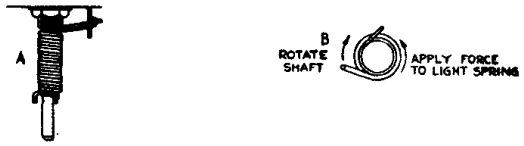

   (b) Rotate volume control shaft in direction indicated until desired level is reached.
   (c) Releasing force on spring automatically locks control so it can be operated from zero to the level where it has been locked.
5. To DECREASE desired maximum Volume level—
   (a) Apply force with the eraser end of a pencil on the heavy weight spring as indicated in sketch (c).

   (b) Rotate to a very low level, then proceed as in step 4.
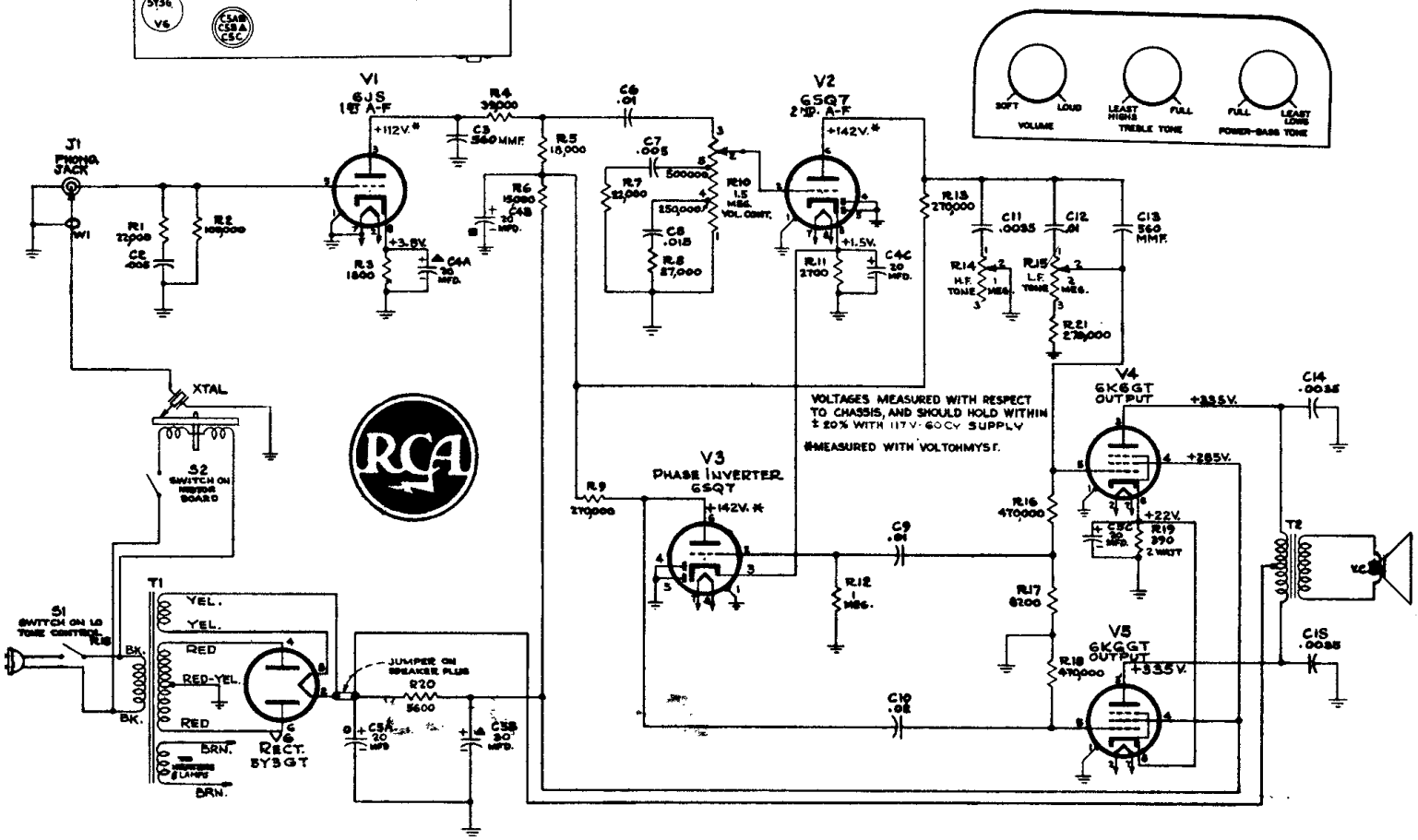
NOTE: The procedure in step (5b) is necessary to prevent possible error that may be introduced due to backlash.