RCA VICTOR

VICTROLA Phonograph
Models—52E and 52HE Series

POWER SUPPLY

105-125 volts, 60 cycle.....40 watts

IMPORTANT—Do not plug chassis into a d.c. power supply.

POWER OUTPUT RATING

Undistorted.....0.8 watts (approx.)
Maximum.....1.2 watts (approx.)

SERVICE HINTS

To Remove Turntable:

Remove spring clip from turntable spindle and lift turntable straight up.

Irregular Turntable Speed:

(1) Oil or grease on rubber tire of turntable drive wheel or on motor spindle. Remove turntable and clean spindle, drive wheel tire, and inside edge of turntable with naphtha or carbon-tetrachloride.
(2) Insufficient tension in drive wheel tension spring.
(3) Friction between drive wheel plate and motor mounting plate.
(4) Lack of lubrication.

LUBRICATION

Motor

The bearings of the motors furnished in these instruments are lubricated at the factory and should require no further lubrication for a period of at least one year. When lubrication is required, apply a few drops of any good grade of S.A.E. #10 oil to the bearing felts.

Turntable Spindle

When lubrication is required, apply one or two drops of Gargoyle 600W to the bearing.

Drive Wheel

Apply one or two drops of any good grade of S.A.E. #10 oil to the bearing.

CAUTION:

Exercise extreme care to prevent getting any oil on the rubber tire or on the motor shaft. Oil on these parts will cause slippage with resultant irregular turntable speed.

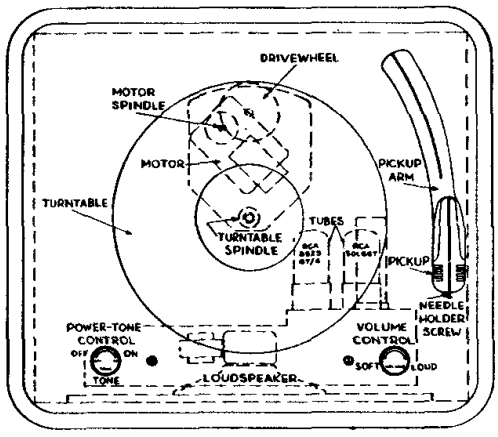

60 TO 50 CYCLE CONVERSION

A spring sleeve or bushing is used to increase the diameter of the motor drive spindle, to compensate for the slower speed of the motor when used on a 50 cycle line.

Spring sleeves and bushings are available as follows:
For motors marked "M-1", use Stock No. 71275.
For motors marked "M-3", use Stock No. 71276.
For motors marked "M-4", use Stock No. 71277.

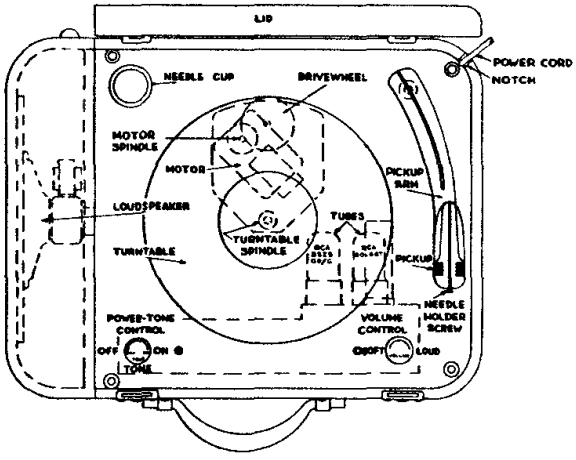

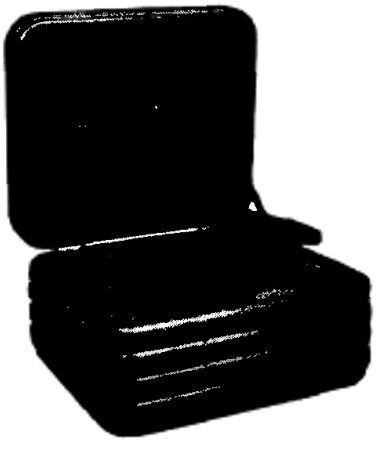
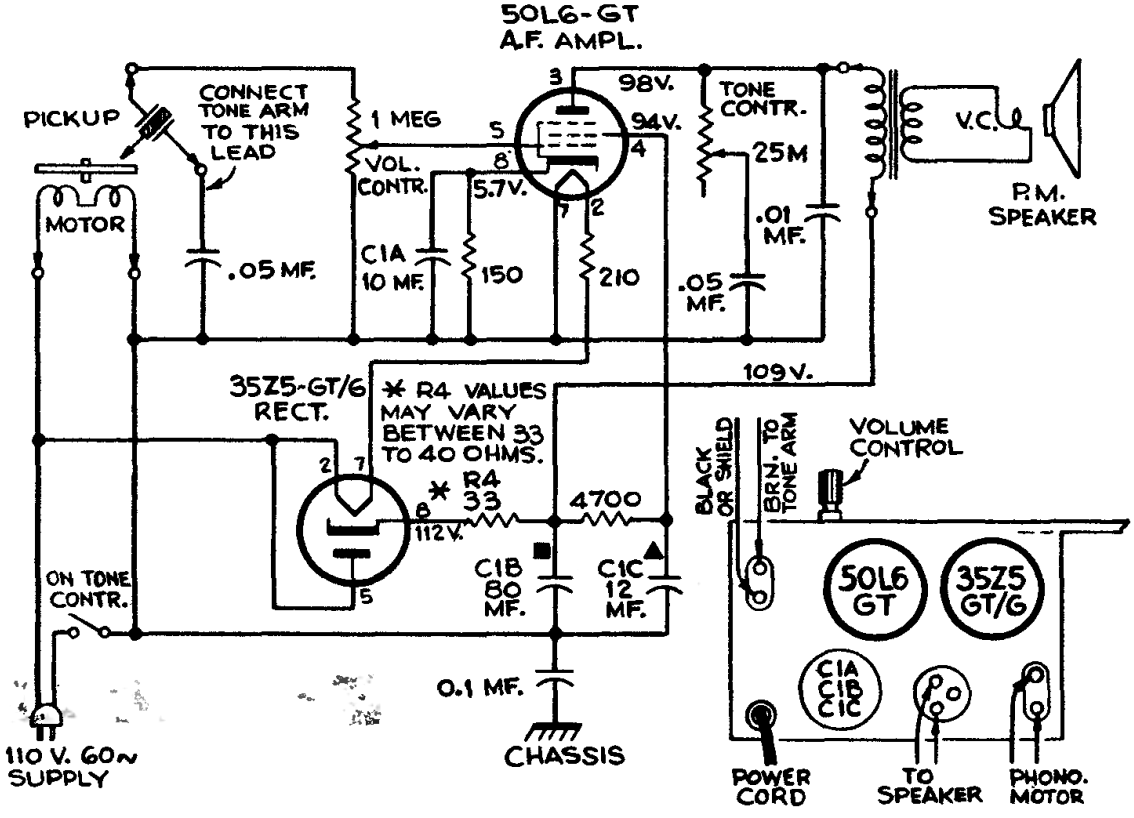
Model 52E