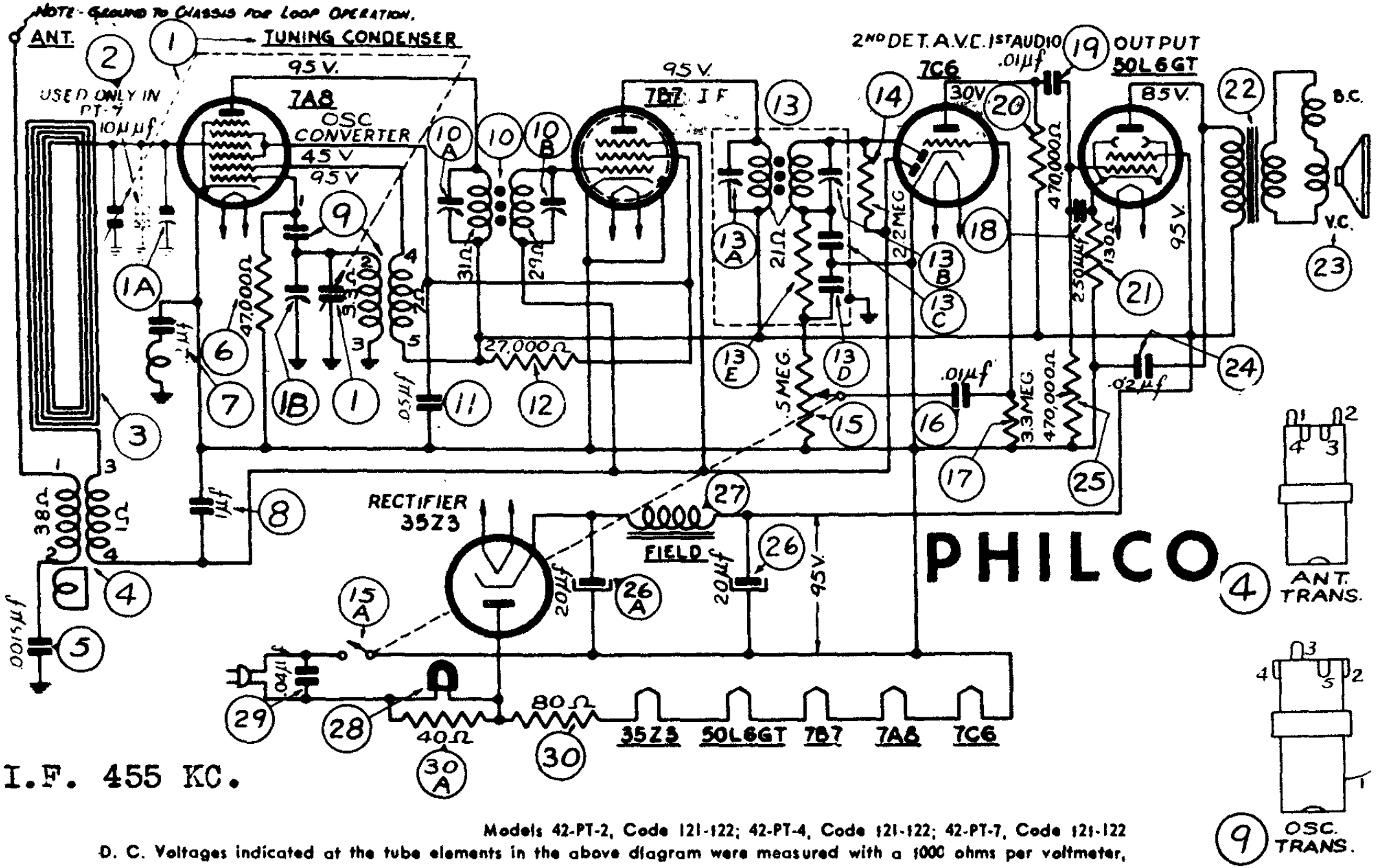

I.F. 455 KC.

Models 42-PT-2, Code 121-122; 42-PT-4, Code 121-122; 42-PT-7, Code 121-122

D. C. Voltages indicated at the tube elements in the above diagram were measured with a 1000 ohms per voltmeter.