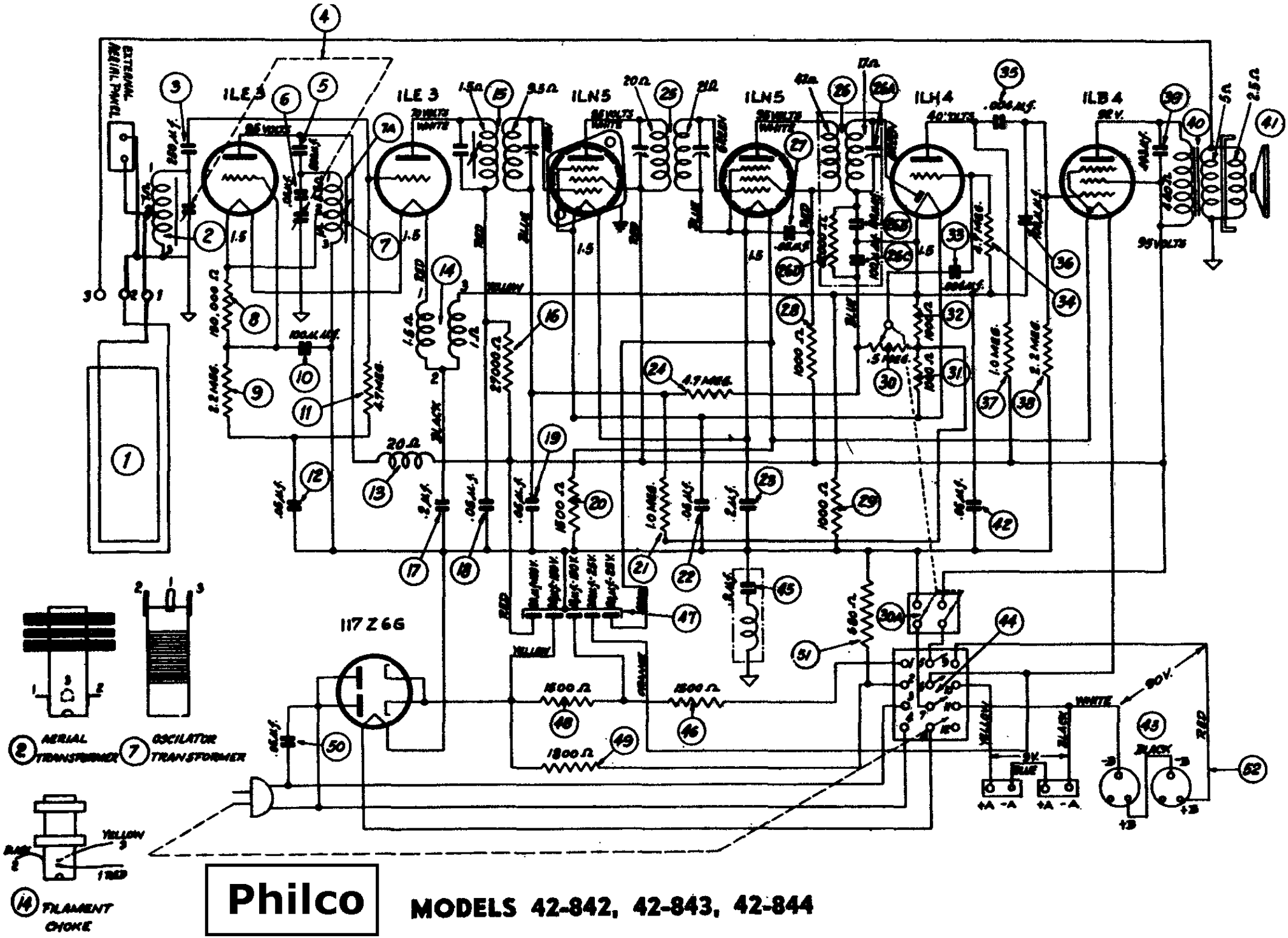

Philco MODELS 42-842, 42-843, 42-844