RADIO WIRE TELEVISION
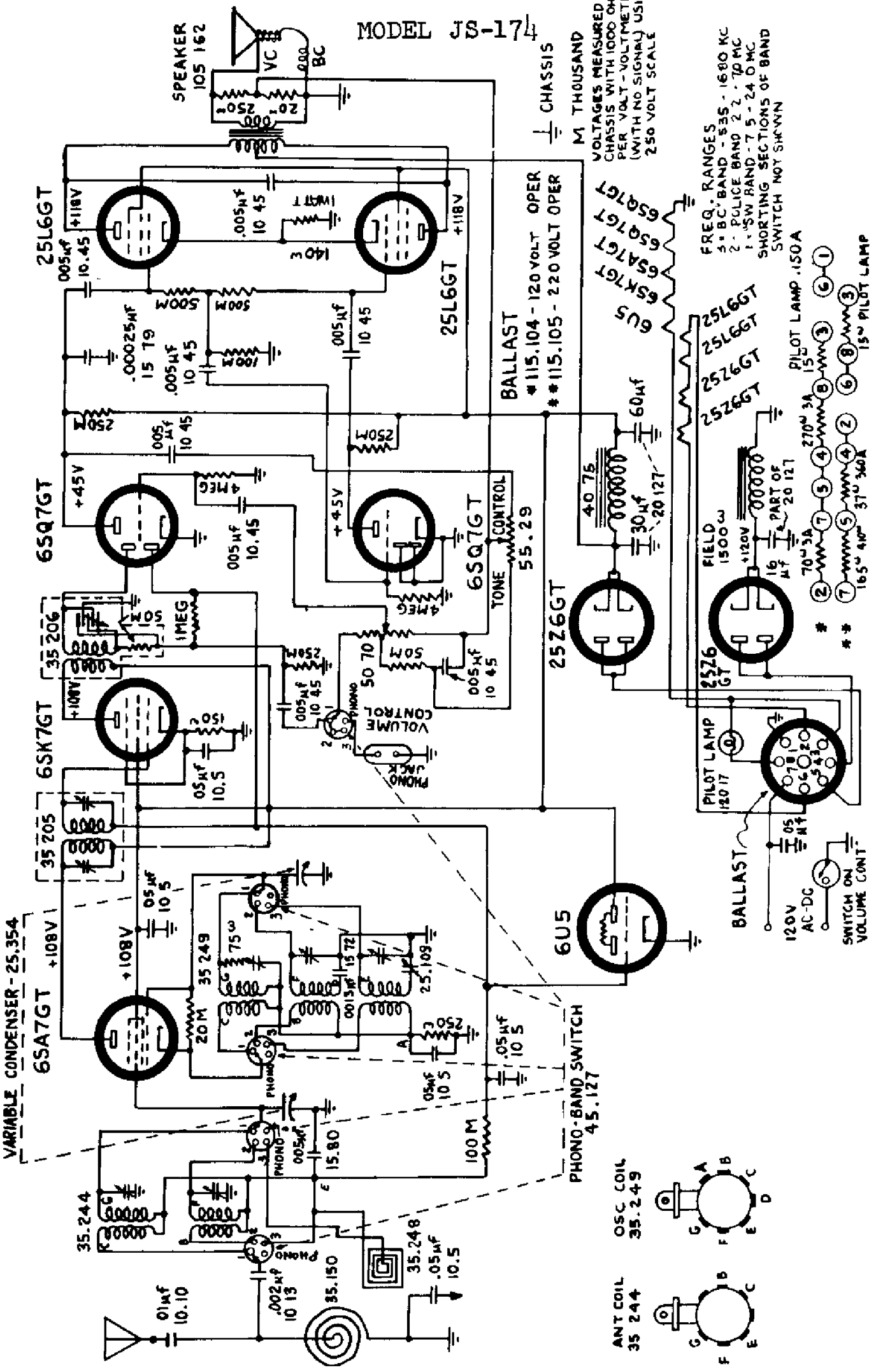
MODEL JS-174