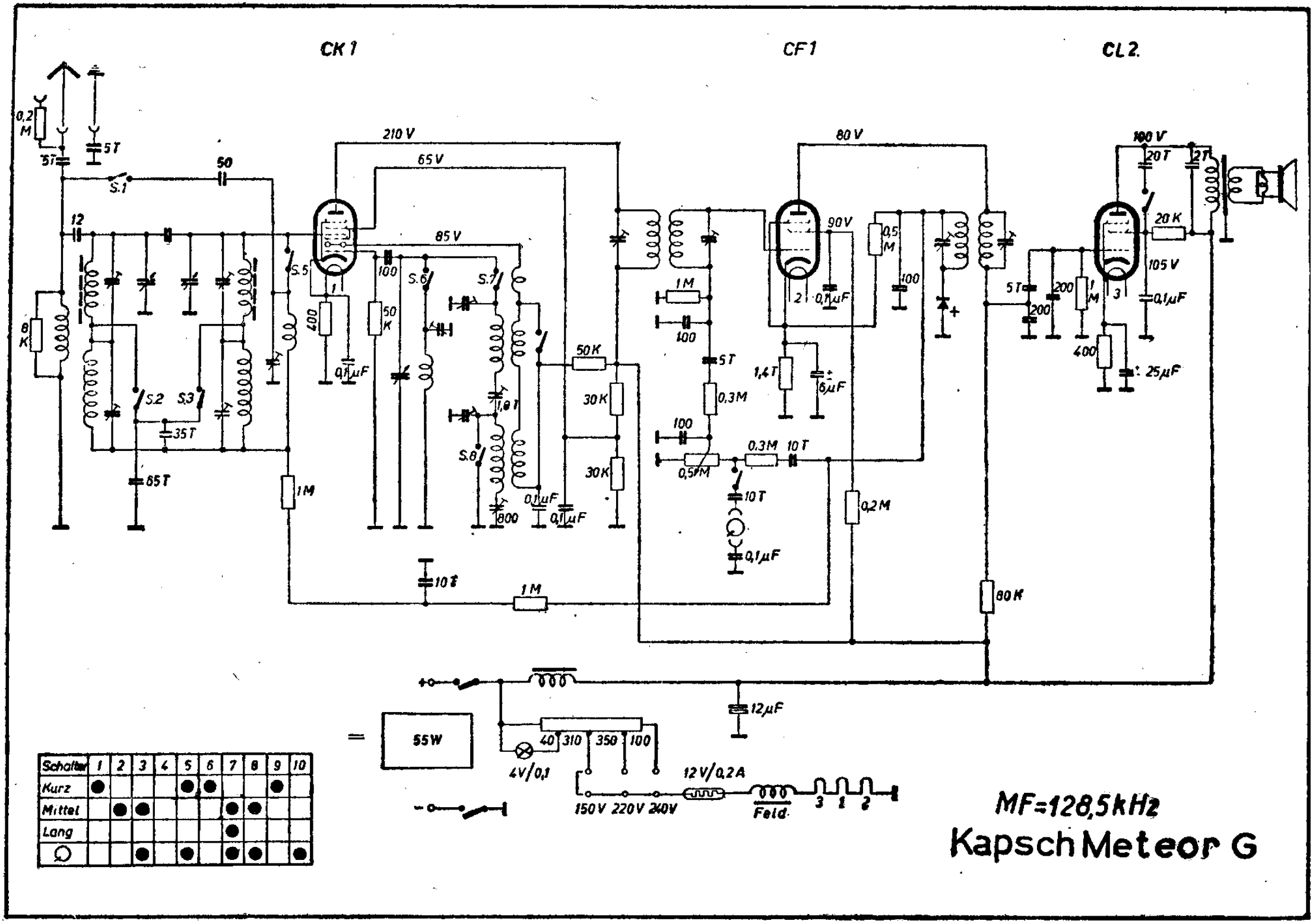

Schalter	1	2	3	4	5	6	7	8	9	10
Kurz	●				●	●			●	
Mittel		●	●				●	●		
Lang							●			
⌕			●		●		●	●		●