PILOT RADIO CORP.

MODELS X-48, X-49

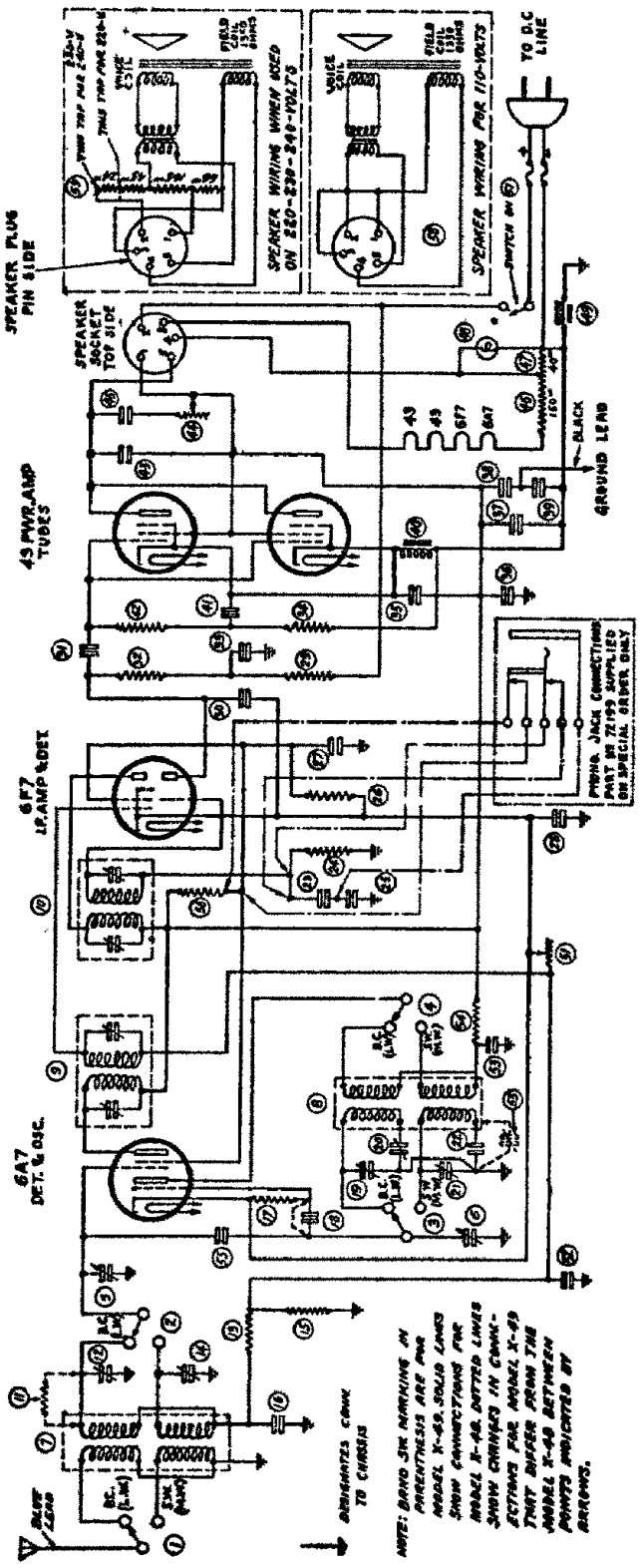

MODEL X48 SUPERHETERODYNE
Range: 16-52 Meters (18,800-5,700 kc.)
178-550 Meters (1,680-545 kc.)

MODEL X49 SUPERHETERODYNE
Range: 178-550 Meters (1,680-545 kc.)
789-2,142 Meters (380-140 kc.)
(Sold in the European area only)

A good antenna is most essential for the reception of signals from stations located thousands of miles from the receiver. The flat top portion of the antenna should be placed as high above the ground and grounded objects as possible. Both lead-in wire and antenna should be located as far from sources of man-made static as possible. Automobile ignition systems, telephone communication lines, electric oil burner installations, motor and trolley power lines are some of the more common offenders of this nature. The installation of a good antenna requires a small amount of additional labor, but the extra effort is always rewarded with improved reception with a minimum of static interference. A properly installed antenna is almost as good as an extra stage of tuned radio frequency amplification.

It is advisable to place the radio receiver close to the incoming lead-in, as frequently an extension about the interior of the house picks up a considerable amount of static along with the desired signal. The illustration shows how to install a lightning arrester if one is desired.

The kit contains two 75 ft. lengths of No. 14 wire. The illustration suggests the use of at least 25 ft. per section. Use as much of the wire up to 75 ft. per section as your location will permit. The letters at the right form a reference to the parts as arranged in the illustration.

Method No. 1: Join the ends of both leads together and connect to antenna terminal of set.

Method No. 2: Connect one wire to antenna lead of set; connect the other wire to the ground lead. Use the method on your set which gives the best performance.

CONTENTS OF PILOT KIT

2—75 ft. lengths of No. 14 enameled, copper wire.....A
100 ft. twisted pair lead-in wire .....B
2—Insulated stand-off insulators C
6—Porcelain insulators .....D
2—Porcelain tubes .....D
6—Insulated staples

ALL-WAVE ANTENNA SYSTEM

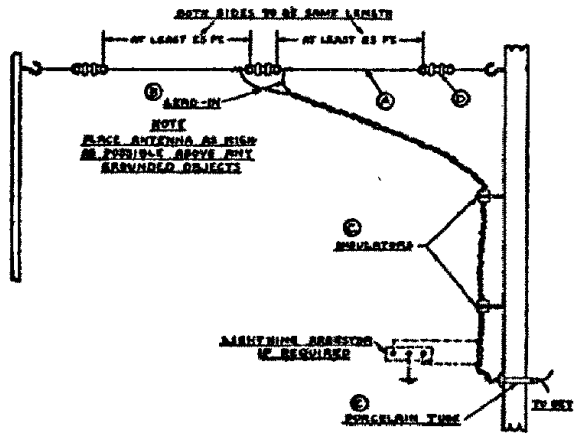

DIAGRAM NO.	PART NO.	MODEL X-48 CONDENSERS DESCRIPTION
1,2,3,4	71173	TRIMMER & PANEL ASS'Y.
A.C.	71656	400 MMFDS. 2 GANG VARIABLE
5	72015-H	.1 MFD. 200-V PAPER
36,53	72015-C	.05 MFD. 600-V PAPER
37	72015-V	.05 MFD. 200-V PAPER
38,39	72015-L	.1 MFD. 400-V PAPER
50,51	72015-P	.25 MFD. 200-V PAPER
45	72015-M	.1 MFD. 600-V PAPER
43	72015-N	.01 MFD. 1000-V PAPER
30	71726-W	.0001 MFDS. MICA
31	71734-W	.0005 MFDS. MICA
32	72016-W	.0001 MFDS. MICA
47	71527-B	NEUTRALIZING ASS'Y. (AS REQD)
29	71593-R	SINGLE PADDER 250-500 MMFDS
33,35,W	71600	4-4-4 MFDS. 150-V ELECT.
		MODEL X-48 RESISTORS
26	13126	25,000 OHMS ½ WATT
32	13171	250,000 OHMS ¼ WATT
13,34	13091	100,000 OHMS ¼ WATT
11,20,25	13164	50,000 OHMS ¼ WATT
24	13074	20,000 OHMS ¼ WATT
12	13028	1,000 OHMS ¼ WATT
21	13024	250,000 OHMS ¼ WATT
23	13001	1 MEG. OHM ¼ WATT
46,47	78673	150 OHMS TAPPED AT 40 & 80 WATTS
61	78262	VOLUME CONTROL & SWITCH 3000 Ω (150 Ω REQ.)
44	78157	TONE CONTROL 10,000 OHMS

DIAGRAM NO.	PART NO.	MODEL X-48 MISCELLANEOUS DESCRIPTION
1,2,3,4	71172-A	BAND SWITCH
7	71169	ANTENNA COIL ASSEMBLY
8	71170	OSCILLATOR COIL ASSEMBLY
9	70936	1ST I.F. COIL ASSEMBLY
10	70937	2ND I.F. COIL ASSEMBLY
48	40801	SPEAKER 6 INCH
49	78166	SPEAKER & RESISTOR ASSEM.
49	71363	DIAL LAMP 6.3 V. .3 AMP
27	70873-D	FUSE .75 AMP
40	71615	PHONO CHOKE 3½" IN HENRIES
49	82007-B	HUM TRAP CHOKE 4.5 H
		MODEL X-49 SAME AS X-48 EXCEPT AS FOLLOWS
DIAGRAM NO.	PART NO.	DESCRIPTION
15	71577-F	DUAL PADDER (250-500 MMFDS. 15-70 MMFDS.
7	71173	ANTENNA COIL ASSEMBLY
8	71174	OSCILLATOR COIL ASSEMBLY
11	13020	50 OHM ¼ WATT RESISTOR
55	71529-B	NOT USED
18	72016-W	NOT USED
20	71593-R	NOT USED
22	71734-W	NOT USED