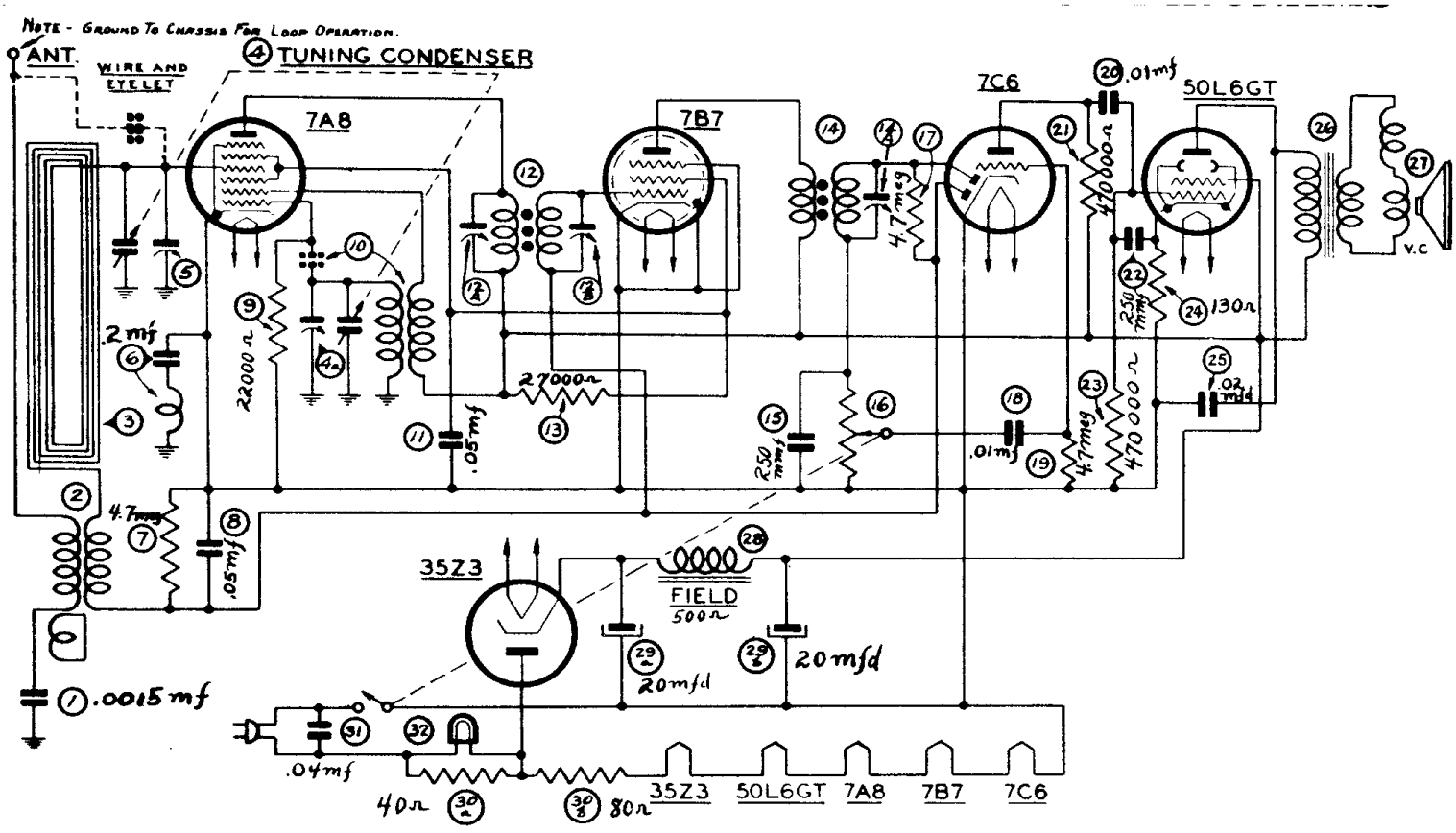

SCHEMATIC DIAGRAM — PT-42, PT-44

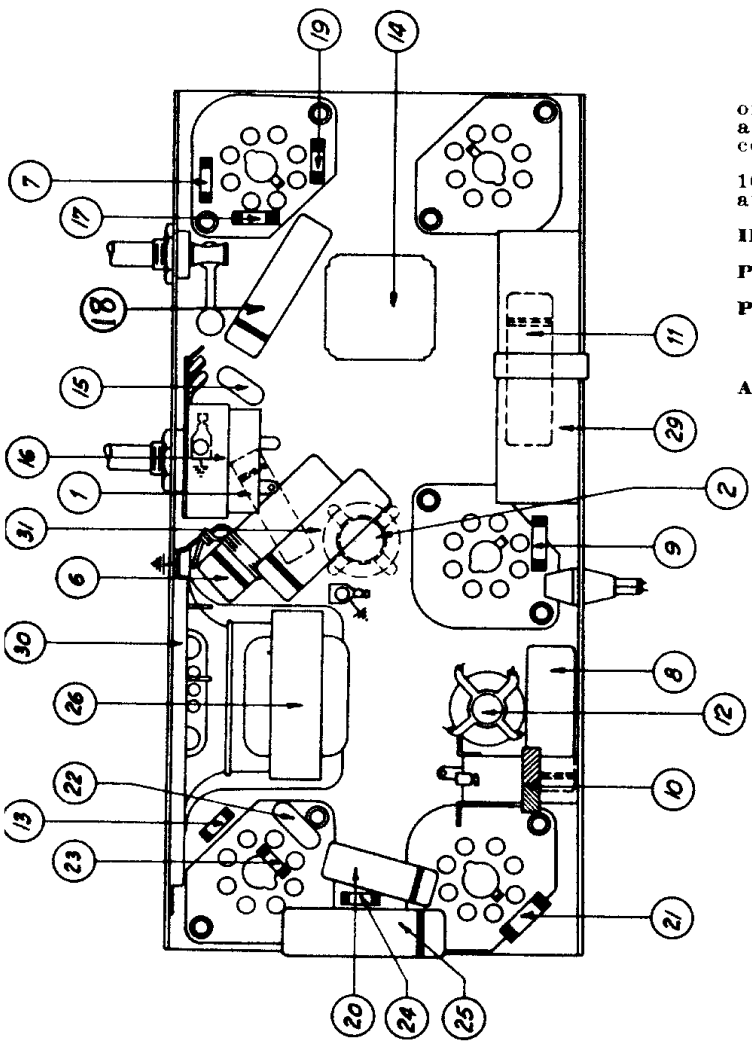

Models PT-30, PT-42, PT-44, PT-49

Models PT-30, PT-42, PT-44, and PT-49 are five (5) tube A. C. or D. C. operated Super-heterodyne compact radios employing a built-in loop aerial. These Models are similar with the exception of the cabinets, chassis and speaker size.

In addition each Model includes a tuning band from 540 to 1600 K. C., Automatic Volume Control; beam power pentode audio output stage and Philco Loktal tubes.

INTERMEDIATE FREQUENCY: 455 K. C.

POWER SUPPLY: 115 Volts, A. C. or D. C.

PHILCO TUBES: 7A8, converter; 7B7, I. F. Amplifier; 7C6, 2nd detector, A. V. C., 1st audio; 50L6GT, beam power audio output and a 35Z3, rectifier.

AERIAL AND GROUND: Under ordinary operating conditions an outside aerial or ground is not required. In some locations, however, such as steel reinforced buildings and other shielded areas, an outside aerial should be used for maximum performance. For this purpose an outside aerial connection is located on the rear lower left corner of the chassis. Simply remove the lug from under the screw and attach the aerial lead to the lug.

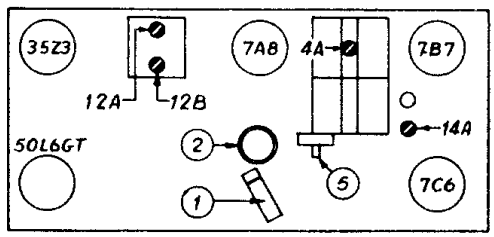

PHILCO